LOOS & CO. INC.
CABLEWARE® DIVISION

AS9100D-Certified Management System
AS9100
With ISO 9001:2015
Loos & Co., Inc., Cableware® Division

2022
CATALOG

901 Industrial Boulevard Naples, FL 34104
P: 800-321-LOOS (5667) - 239-643-LOOS (5667)
F: 239-643-4558 - Email: sales@loosnaples.com
Website: www.loosnaples.com

CABLEWARE® DIVISION

To Order Call
(800) 321-LOOS (5667)

How to order:

Order by part number and dash number. It is helpful to give us the size of the wire rope the hardware is to fit. If you don't know the exact size, send a short sample with your order. Order standard packaged quantities where applicable. If no standard package shows, we will supply any quantity from one piece up. Contact us for details regarding warranties, credit, payment terms, and minimum billing.

Look for our trademarks to assure you are receiving quality products:

All required MS fittings are trademarked:	ⓜ
All compression fittings are trademarked:	Locoloc®
All swaging tools are trademarked:	Locoloc®
All easily attached fittings are trademarked:	Loos Ends®
All our products are trademarked:	Cableware®

For all your Hardware and Tool needs, call our sales staff at our Cableware Division at:

(800) 321-LOOS (5667)

Email: sales@loosnaples.com / Web: www.loosnaples.com

Fax: (239) 643-4558

Naples, FL USA

For all your Wire Rope, Cable and Cable Assembly needs, call our sales staff at our Pomfret Division at:

(800) 533-LOOS (5667)

Email: sales@loosco.com / Web: www.loosco.com

Fax: (860) 928-6167

Pomfret, CT USA

For information about Central Wire Industries, our parent company, contact:

(800) 435-8317

Email: sales@centralwire.com / Web: www.centralwire.com

United States, Canada, United Kingdom

CABLEWARE® DIVISION
901 Industrial Blvd. Naples, FL 34104
(800) 321-LOOS (5667) | (239) 643-5667
Fax: (239) 643-4558 | sales@loosnaples.com
www.loosnaples.com

© Loos & Co., Inc. - 2022
901 Industrial Blvd., Naples FL 34104

TERMS AND CONDITIONS OF SALE

901 INDUSTRIAL BOULEVARD, NAPLES, FL 34104
USA/TEL: (239) 643-LOOS (5667) FAX: (239) 643-4558
TOLL FREE: 1-800-321-LOOS (5667)
www.loosnaples.com

NOTE: Because of the fluctuations and uncertainties of primary metal markets, we may be forced to add surcharges to certain metals. Because of the rapidity of changes, these surcharges may be subject to immediate additional costs to our customers. Where it is possible we will do our outmost to advise you of surcharge increases in advance.

WARRANTY: All Loos & Co., Inc. products are unconditionally guaranteed against manufacturing defects. Any item found to be defective will be replaced or adjustment made provided we are notified promptly upon receipt. **We reserve the right to request that the item be returned to us for examination and cannot be responsible for labor charges incurred in the replacement of any item. Our liability for defects on any item shall not exceed its replacement cost to us. Debit memos will not be accepted without written authorization from us.**

CREDIT: Open account terms may be extended to firms with satisfactory commercial credit rating. Firms without commercial credit rating can qualify for open account terms by listing on their order the name of their bank and three active credit references. T**o avoid delay in servicing an order we will ship C.O.D. when we lack proper credit information or we can accept VISA, MASTERCARD or DISCOVER credit cards.**

PAYMENT TERMS: NET 30 DAYS.
Net amount of invoice is due in full 30 days after invoice date.
A service charge of 1.5% per month (18% per annum) will be added to outstanding balances over 30 days old.

FREIGHT ALLOWANCES: All shipments are made freight collect and are F.O.B. shipping point (Ex Works). We will do everything possible to see that our customers receive the best possible combination of freight weights and routing. But in order to ship in the most expedient manner, we can not guarantee that each and every shipment will be consolidated to arrive at the optimum freight costs. We suggest you specify routing and/or freight lines of your choice.

MINIMUM ORDER, HARDWARE AND TOOLS ONLY
REPLACEMENT PARTS $25.00
EXPORT ORDERS: FOR SHIPMENT OUTSIDE U.S.A. $250.00
DOMESTIC ORDERS: FOR SHIPMENT INSIDE U.S.A. $50.00

CLAIMS: All products are carefully inspected and packaged to assure delivery in good condition. Product damage or loss occurring in transit is the responsibility of the carrier. In the event of such loss, you must advise the carrier within 15 days after delivery. We will give all reasonable assistance in tracing shortages or filling claims.

RETURNED MERCHANDISE: Credit will not be issued for materials returned without a Return Material Authorization (RMA) number. Return requests must be communicated to our Naples office and include an itemized list with the invoice number and date. All returns are subject to evaluation prior to an RMA being issued. Return requests beyond 90 days of receipt of order may not be accepted. All returns are subject to a 20% restocking charge.

SPECIFICATIONS: The dimensions, weights, strengths, lengths, and other specifications shown in the catalog are subject to variation within reasonable tolerances. **Aluminum Sleeves and Stops are inspected and accepted to ANSI acceptance level 6.5.**

CERTIFICATIONS: MS, AN, NAS and Boeing specified products DFARS, Country of Origin/Melt, Mercury Free, Revision level (except MS51844), Date of Manufacture, no charge if requested at time of order or $50/line item after order acceptance. Charges for additional items are: First Article Inspection $500, Final Inspection Report $200, Raw Material Certification $200, Certificate of Origin $150, Process Certification $50 and other custom requests $100 per line.

ORDERS: All orders are subject to acceptance by our home office. We cannot be responsible for delays or nonfulfillment due to riots, hurricanes, floods, strikes or other causes beyond our control.

CUSTOM MANUFACTURED ORDERS: Orders for custom manufactured parts or cable assemblies will be considered irrevocable after confirmation of receipt of purchase order. Such orders require special order raw materials and must be considered the property of the customer once purchase order is accepted.

Please note that all custom manufactured orders will be shipped within +/- 10% of the total ordered quantity (i.e. If 500 pcs of an item are ordered, the total shipment may range from 450 - 550 pcs)

All prices are subject to change without notice.
Invoices will be based on the prices prevailing at the time shipment is to be made.

LOOS & CO. INC.
CABLEWARE® DIVISION

© Loos & Co., Inc. - 2022
901 Industrial Blvd., Naples FL 34104

All prices are NET F.O.B Naples, FL

WIRE ROPE TERMINALS

BA-3

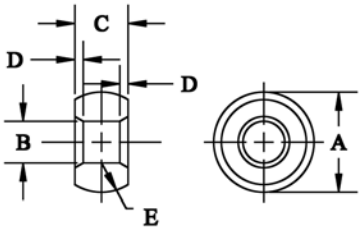

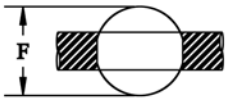

Plain Ball **BA3**

CORROSION-RESISTANT STEEL

SPECIFICATIONS

MS Part No.	Cable Diameter	A	B	C	D	E	F Sphere Dia	Min. Breaking Strength Lbs.	Lbs. per Piece
BA3-1	1/32	.211 .208	.048 .045	.141 .137	.026 .016	.083 .073	.1905 .1875	88	0.002
BA3-1.5	3/64	.211 .208	.057 .053	.141 .137	.026 .016	.083 .073	.1905 .1875	215	0.0019
BA3-2	1/16	.211 .208	.076 .073	.141 .137	.026 .016	.083 .073	.1905 .1875	385	0.0017
BA3-3	3/32	.288 .284	.106 .102	.174 .170	.041 0.31	.099 .089	.253 .250	735	0.004
BA3-4	1/8	.355 .351	.143 .139	.190 .184	.041 .031	.142 .132	.317 .312	1,200	0.006
BA3-5	5/32	.429 .425	.175 .171	.227 .222	.041 .031	.170 .160	.380 .375	1,680	0.009
BA3-6	3/16	.498 .493	.207 .203	.264 .259	.041 .031	.197 .187	.442 .437	2,520	0.01
BA3-7	7/32	.560 .555	.238 .233	.303 .297	.041 .031	.220 REF	.505 .500	2,800	0.0143
BA3-8	1/4	.629 .624	.269 .264	.334 .339	.050 .040	.245 REF	.567 .562	3,500	0.0204

Loos & Co. BA3 same as Boeing BACT14B and NAS 494.

MS20663

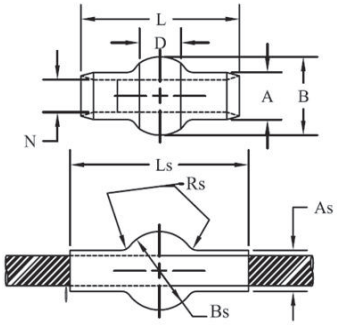

Double Shank Ball **MS20663**

CORROSION-RESISTANT STEEL

SPECIFICATIONS

MS Part No.	Cable Dia.	A Dia.	As Dia.	B Dia.	Bs Spherical Dia.	D	L ±.0075	Ls Ref.	N Dia.	Rs Ref Rad.	Lbs. Per Piece
MS20663C2	1/16	.127	.112	.207	.190	.114	.362	.390	.073	.014	.0016
MS20663C3	3/32	.163	.143	.277	.253	.152	.525	.578	.104	.019	.0032
MS20663C4	1/8	.218	.190	.345	.315	.1895	.688	.765	.139	.023	.0094
MS20663C5	5/32	.254	.222	.419	.379	.227	.850	.953	.169	.028	.0125
MS20663C6	3/16	.293	.255	.487	.442	.264	1.012	1.140	.201	.033	.025
MS20663C7	7/32	.347	.302	.555	.505	.3025	1.175	.1328	.233	.038	.032
MS20663C8	1/4	.401	.348	.624	.567	.3395	1.337	1.515	.264	.042	.040
MS20663C9	9/32	.439	.382	.694	.632	.3775	1.497	1.719	.297	.046	.042
MS20663C10	5/16	.475	.413	.763	.694	.4145	1.664	1.875	.328	.046	.043

MS20664

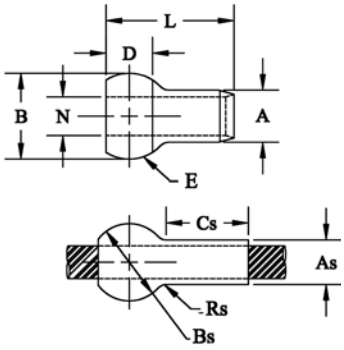

Single Shank Ball **MS20664**

CORROSION-RESISTANT STEEL

SPECIFICATIONS

MS Part No.	Cable Dia.	A Dia.	As Dia.	B Dia.	Bs Spherical Dia.	Cs Ref.	D Ref.	E Rad Ref	L	N Dia.	Rs Ref Rad	Lbs. Per Piece
664-C1.5	3/64	.132	.112	.212	.190	.156	.114	.0825	.2685	.053	.014	.00132
MS20664C2	1/16	.132	.112	.212	.190	.156	.114	.0825	.2685	.073	.014	.0012
MS20664C3	3/32	.168	.143	.282	.253	.234	.152	.110	.384	.104	.019	.005
MS20664C4	1/8	.223	.190	.350	.315	.313	.1895	.137	.500	.139	.023	.0075
MS20664C5	5/32	.259	.222	.424	.379	.391	.2275	.165	.616	.169	.028	.01
MS20664C6	3/16	.298	.255	.492	.442	.469	.2645	.192	.730	.201	.033	.015
MS20664C7	7/32	.352	.302	.560	.505	.547	.3025	.220	.846	.233	.038	.025
MS20664C8	1/4	.406	.348	.629	.567	.625	.3395	.247	.962	.264	.042	.03
MS20664C9	9/32	.444	.382	.699	.632	.750	.3775	.275	1.078	.297	.046	.05
MS20664C10	5/16	.480	.413	.768	.694	.813	.4145	.302	1.193	.328	.046	.066
664C12	3/8	.553	.476	.903	.820	.935	.489	.357	1.425	.411	.061	.0874

Loos & Co., Inc. is a Qualified Producer (QPL) of MS Fittings and listed in QPL-781 & QPL-8878.
We also manufacture swaging equipment capable of swaging to meet
MIL-DTL-781, MIL-DTL-6117, and MIL/SAE AS10081

© Loos & Co., Inc. - 2022
901 Industrial Blvd., Naples FL 34104

LOOS & CO. INC.
CABLEWARE® DIVISION
901 Industrial Blvd. Naples, FL 34104
(800) 321-LOOS (5667) | (239) 643-5667
Fax: (239) 643-4558 | sales@loosnaples.com
www.loosnaples.com

WIRE ROPE TERMINALS

Terminal, Cylindrical **ST24**

CORROSION-RESISTANT STEEL

SPECIFICATIONS

ST24

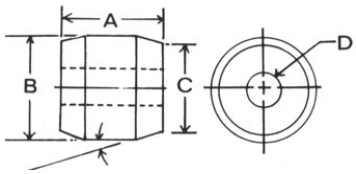

Also known as "Stop Buttons," "Sleeves," "Boeing Buttons," (Boeing Part No. BACT14A, Except ST24-8), these stainless steel terminals have a multitude of uses. When properly applied, they will hold the breaking strength of the wire rope (except for 1x7 or 1x19 constructions).

MS Part No.	Cable Diameter	A	B	C	D	C = As	Die Size	Lbs. per Piece
ST24-2	1/16	.224 .214	.221 .217	.190 .185	.076 .073	.190	3/32	.0019
ST24-3	3/32	.333 .323	.252 .248	.219 .214	.107 .104	.219	1/8	.005
ST24-4	1/8	.416 .406	.298 .294	.250 .245	.146 .141	.250	5/32	.0075
ST24-5	5/32	.510 .500	.377 .373	.313 .308	.177 .172	.313	3/16	.01
ST24-6	3/16	.635 .625	.439 .435	.375 .370	.208 .203	.375	7/32	.0195
ST24-8	1/4	.885 .875	.565 .560	.500 .495	.270 .265	.500	9/32	.0457

Minimum breaking strength of ST24 terminals equals the minimum breaking strength of flexible carbon steel wire rope conforming to Specififfcation MIL-DTL-83420.
For swaging of these terminals, the dies for the next larger size AN-MS standard terminals are required.

NAS1435-E

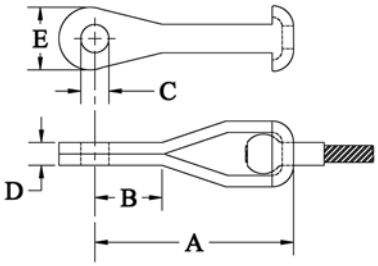

Strap Eyes **NAS1435-E**

STRAP, EYE END
CORROSION-RESISTANT STEEL

SPECIFICATIONS

MS Part No.	Cable Dia.	A	B	C	D	E	F	Lbs. Per Piece
NAS1435E2	1/16	1-1/16	.454	.188	.088	3/8	.093	.006
NAS1435E3	3/32	1-1/12	.616	.188	.103	7/16	.108	.013
NAS1435E4	1/8	1-5/8	.638	.188	.190	1/2	.195	.030
NAS1435E5	5/32	1-31/32	.699	.250	.197	9/16	.202	.042
NAS1435E6	3/16	2-3/16	.750	.313	.255	11/16	.260	.083

Also available in Commercial Grade (SP1 Series).

NAS1435-K

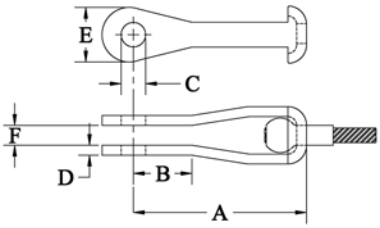

Strap Forks **NAS1435-K**

STRAP, FORK END
CORROSION-RESISTANT STEEL

SPECIFICATIONS

MS Part No.	Cable Dia.	A	B	C	D	E	F	Lbs. Per Piece
NAS1435K2	1/16	1-1/16	.454	.188	.042	3/8	.093	.006
NAS1435K3	3/32	1-1/2	.616	.188	.049	7/16	.108	.013
NAS1435K4	1/8	1-5/8	.638	.188	.093	1/2	.195	.030
NAS1435K5	5/32	1-31/32	.699	.250	.096	9/16	.202	.042
NAS1435K6	3/16	2-3/16	.750	.313	.125	11/16	.260	.083

Also avaliable in Commercial Grade (SP2 Series).

PI5

Cotter Pin **PI5**

CORROSION-RESISTANT STEEL

Part No.	A	B	C
PI5-1	.062	.75	1/8
PI5-2	.093	1.00	3/16
PI5-3	.125	1.250	1/4
PI5-4	.156	1.625	3/8

Non-stock items subject to reasonable delivery, depending on current manufacturing lead time. When ordering: Specify Part Number and diameter of cable hardware it is to fit.

LOOS & CO. INC.
CABLEWARE® DIVISION
901 Industrial Blvd. Naples, FL 34104
(800) 321-LOOS (5667) | (239) 643-5667
Fax: (239) 643-4558 | sales@loosnaples.com
www.loosnaples.com

© Loos & Co., Inc. - 2022
901 Industrial Blvd., Naples FL 34104

WIRE ROPE TERMINALS

Clevis Pins **PI1**

PI1

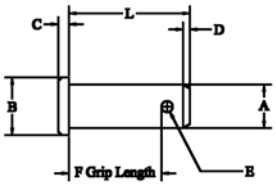

CORROSION-RESISTANT STEEL

SPECIFICATIONS

Part No.	Fits MS Nos. Indicated	Cable Diam.	A	B	C	D	E	L	F	Lbs. per Piece
PI1-3	MS20667-2	1/16	3/16	5/16	1/16	3/64	.081	7/16	5/16	.004
	MS20667-3	3/32	3/16	5/16	1/16	3/64	.081	7/16	5/16	.004
PI1-4	MS20667-4	1/8	3/16	5/16	1/16	3/64	.081	17/32	13/32	.005
PI1-5	MS20667-5	5/32	1/4	3/8	1/16	3/64	.089	17/32	13/32	.009
PI1-6	MS20667-6	3/16	5/16	7/16	1/16	3/64	.098	23/32	9/16	.017
PI1-7	MS20667-7	7/32	5/16	7/16	1/16	1/16	.098	27/32	11/16	.020
PI1-8	MS20667-8	1/4	3/8	1/2	3/32	1/16	.098	31/32	13/16	.033
PI1-9	MS20667-9	9/32	7/16	5/8	3/32	1/16	.1405	1-3/32	7/8	.040
PI1-10	MS20667-10	5/16	7/16	5/8	3/32	1/16	.1405	1-3/32	7/8	.040
PI1-12	MS20667-12	3/8	1/2	11/16	1/8	5/64	.1405	1-1/8	7/8	.050
PI1-14	MS20667-14	7/16	9/16	23/32	1/8	5/64	.172	1-7/32	7/8	.070
PI1-16	MS20667-16	1/2	5/8	13/16	1/8	5/64	.172	1-5/16	1-1/16	.127

Fork End **MS20667**

MS20667

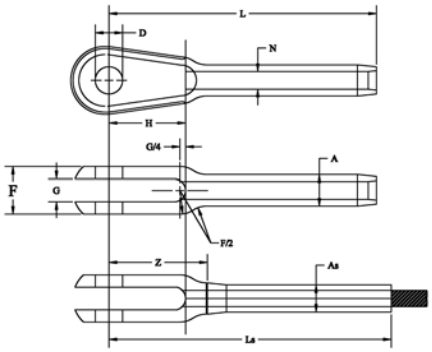

CORROSION-RESISTANT STEEL

SPECIFICATIONS

MS Part No.	Cable Dia.	A Dia.	As Dia.	D Dia.	F +.010 -.005	G	H	L +.020 -.000	Ls Ref.	N Dia.	Z Min.	Lbs. Per Piece
MS20667-2	1/16	.160	.138	.190	.218	.093	.500	1.572	1.75	.078	.600	.01
MS20667-3	3/32	.218	.190	.190	.254	.108	.670	1.945	2.06	.109	.750	.02
MS20667-4	1/8	.250	.219	.190	.383	.195	.735	2.352	2.61	.141	.91	.0325
MS20667-5	5/32	.297	.250	.250	.406	.202	.800	2.655	3.00	.172	.97	.05
MS20667-6	3/16	.359	.313	.313	.543	.260	.880	3.071	3.24	.203	1.13	.09
MS20667-7	7/32	.427	.375	.313	.625	.296	.970	3.440	3.74	.234	1.25	.15
MS20667-8	1/4	.494	.438	.375	.688	.313	1.070	3.806	4.10	.265	1.37	.20
MS20667-9	9/32	.563	.500	.438	.719	.327	1.170	4.120	4.48	.297	1.43	.30
MS20667-10	5/16	.635	.563	.438	.765	.348	1.268	4.438	4.86	.328	1.50	.3812
MS20667-12	3/8	.703	.625	.500	.830	.380	1.525	5.333	5.74	.404	1.89	.575
MS20667-14	7/16	.781	.688	.562	.830	.380	1.776	6.102	6.57	.468	2.16	.775
MS20667-16	1/2	.844	.750	.625	1.035	.473	1.903	6.938	7.50	.531	2.31	1.625
MS20667-18	9/16	.984	.875	.750	1.241	.567	2.375	7.75	8.34	.594	2.81	2.14
MS20667-20	5/8	1.109	1.00	.875	1.351	.663	2.770	8.673	9.36	.656	3.23	2.66
MS20667-24	3/4	1.359	1.250	.875	1.451	.663	2.791	9.740	10.31	.781	3.30	2.85
MS20667-28	7/8	1.593	1.437	1.000	1.656	.756	3.170	10.802	11.56	.921	3.70	3.65
MS20667-32	1	1.812	1.625	1.125	1.864	.851	3.562	12.312	13.22	1.046	4.15	8.50

Eye End **MS20668**

MS20668

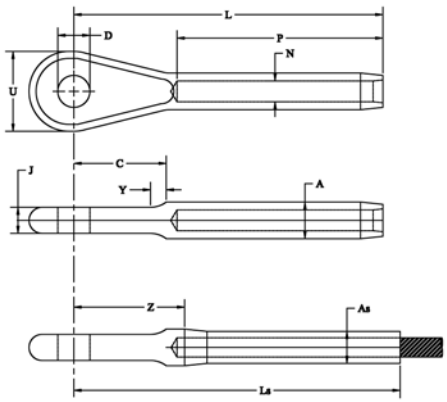

CORROSION-RESISTANT STEEL

SPECIFICATIONS

MS Part No.	Cable Dia.	A Diam.	As Dia.	C ±.020	D Dia.	J	L +.020 -.000	Ls. Ref.	N Dia.	P	U +.025 -.010	Y	Z Min.	Lbs per piece
MS20668-2	1/16	.160	.138 +.000 -.005	.523	.190	.088	1.631	1.809	.078	1.042	.359	.072	.662	.009
MS20668-3	3/32	.218	.190 "	.707	.190	.103	2.043	2.160	.109	1.261	.438	.092	.856	.018
MS20668-4	1/8	.250	.219 "	.738	.190	.190	2.337	2.593	.141	1.511	.500	.103	.900	.035
MS20668-5	5/32	.297	.250 "	.831	.250	.197	2.684	3.029	.172	1.761	.640	.131	.997	.050
MS20668-6	3/16	.359	.313 "	.903	.313	.255	3.019	3.187	.203	2.011	.781	.155	1.082	.090
MS20668-7	7/32	.427	.375 +.000 -.007	1.007	.313	.291	3.382	3.678	.234	2.261	.813	.187	1.195	.135
MS20668-8	1/4	.494	.438 "	1.133	.375	.307	3.763	4.062	.265	2.511	.968	.221	1.326	.200
MS20668-9	9/32	.563	.500 +.000 -.008	1.257	.438	.322	4.153	4.512	.297	2.761	1.109	.251	1.465	.250
MS20668-10	5/16	.635	.563 "	1.373	.438	.343	4.546	4.969	.328	3.011	1.218	.281	1.609	.400
MS20668-12	3/8	.703	.625 "	1.688	.500	.375	5.562	5.968	.404	3.511	1.500	.320	2.124	.575
MS20668-14	7/16	.781	.688 "	1.968	.562	.375	6.398	6.867	.468	4.011	1.750	.350	2.460	.790
MS20668-16	1/2	.844	.750 +.000 -.009	2.115	.625	.468	7.323	7.886	.531	4.698	1.875	.406	2.698	1.050
MS20668-18	9/16	.984	.875 "	2.625	.750	.562	8.185	8.778	.594	5.011	2.340	.450	3.247	2.00
MS20668-20	5/8	1.109	1.00 +.000 -.010	3.062	.875	.657	9.167	9.854	.656	5.511	2.730	.515	3.729	2.25
MS20668-24	3/4	1.359	1.25 +.000 -.012	3.093	.875	.657	10.328	10.900	.781	6.511	2.750	.600	3.890	2.50
MS20668-28	7/8	1.593	1.437 "	3.515	1.00	.750	11.530	12.290	.921	7.166	3.125	.675	4.437	3.50
MS20668-32	1	1.812	1.625 "	3.937	1.125	.844	13.156	14.062	1.046	8.229	3.510	.775	5.000	8.258

© Loos & Co., Inc. - 2022
901 Industrial Blvd., Naples FL 34104

LOOS & CO. INC.
CABLEWARE® DIVISION
901 Industrial Blvd. Naples, FL 34104
(800) 321-LOOS (5667) | (239) 643-5667
Fax: (239) 643-4558 | sales@loosnaples.com
www.loosnaples.com

WIRE ROPE TERMINALS

EY1

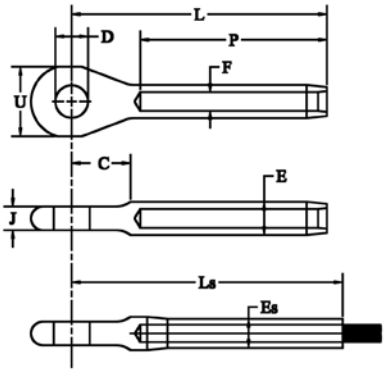

Marine Eye **EY1**

CORROSION-RESISTANT STEEL (TYPE 316 STAINLESS STEEL)

SPECIFICATIONS

MS Part No.	Cable Dia.	C Ref	D +.010 -.010	E +.000 -.005	F +.007 -.003	J ± 1/32	L REF	P +.032 -.010	Max. U Ref.	After Swage Es +.000 -.009	After Swage Ls Ref.	Lbs. Per Piece
EY1-2X	1/16	.375	.264	.160	.078	.218	1.500	.938	.594	.138	1.809	.015
EY1-3X	3/32	.500	.264	.218	.109	.218	1.750	1.188	.594	.190	2.070	.028
EY1-4X	1/8	.500	.264	.250	.141	.218	2.088	1.500	.594	.219	2.401	.033
EY1-5X	5/32	.580	.327	.297	.172	.281	2.355	1.688	.750	.250	2.709	.055
EY1-6X	3/16	.580	.389	.359	.203	.359	2.750	2.000	.875	.313	3.147	.090
EY1-7X	7/32	.800	.452	.427	.234	.406	3.220	2.313	1.000	.375	3.787	.150
EY1-8X	1/4	.900	.514	.494	.265	.468	3.625	2.500	1.125	.438	4.282	.250
EY1-9X	9/32	.990	.514	.563	.297	.468	3.795	2.688	1.125	.500	4.514	.330
EY1-10X	5/16	1.080	.640	.635	.328	.593	4.495	3.250	1.375	.563	5.274	.500
EY1-12X	3/8	1.150	.640	.703	.390	.593	4.930	3.500	1.375	.625	5.659	.670
EY1-14X	7/16	1.24	.765	.781	.468	.719	5.375	3.938	1.438	.688	6.150	1.00
EY1-16X	1/2	1.290	.890	.844	.531	.844	6.250	4.750	1.875	.750	7.187	1.25

Stud **MS21259** (AN666)

CORROSION-RESISTANT STEEL

Be Sure to specify RH or LH Thread

SPECIFICATIONS

MS Part No. RH Thread	MS Part No. LH Thread	Cable Dia.	Thread B UN-3A UNF-3A	A Diam.	As Diam.	C Diam.	F	L ±.063	Ls Ref.	N Dia.	P	V +.005 -.000	S +.062 -.000	w ± .016	Y +.083 -.020	Lbs. Per Piece
MS21259-2RH	**MS21259-2LH**	1/16	(# 6)-40	.160	.138	.121	.188	2.473	2.65	.078	1.042	.063	.969	1.174	1.045	.01
MS21259-3RH	**MS21259-3LH**	3/32	(# 10)-32	.218	.190	.169	.250	2.879	3.00	.109	1.261	.063	1.188	1.411	1.204	.0225
MS21259-4RH	**MS21259-4LH**	1/8	(1/4)-28	.250	.219	.226	.313	3.333	3.59	.141	1.511	.063	1.438	1.682	1.376	.0375
MS21259-5RH	**MS21259-5LH**	5/32	(1/4)-28	.297	.250	.226	.313	3.627	3.97	.172	1.761	.063	1.688	1.958	1.376	.0475
MS21259-6RH	**MS21259-6LH**	3/16	(5/16)-24	.359	.313	.285	.375	4.002	4.17	.203	2.011	.098	1.938	2.237	1.458	.08
MS21259-7RH	**MS21259-7LH**	7/32	(3/8)-24	.427	.375	.347	.438	4.516	4.81	.234	2.261	.098	2.188	2.518	1.625	.12
MS21259-8RH	**MS21259-8LH**	1/4	(3/8)-24	.494	.438	.347	.500	4.937	5.24	.265	2.511	.098	2.438	2.784	1.750	.165
MS21259-9RH	**MS21259-9LH**	9/32	(7/16)-20	.563	.500	.405	.625	5.391	5.75	.297	2.761	.098	2.688	3.076	1.875	.265
MS21259-10RH	**MS21259-10LH**	5/16	(1/2)-20	.635	.563	.467	.688	5.844	6.27	.328	3.011	.098	2.938	3.326	2.000	.375
MS21259-12RH	**MS21259-12LH**	3/8	(9/16)-18	.703	.625	.529	.750	6.656	7.06	.404	3.511	.098	3.438	3.828	2.250	.500
MS21259-14RH	**MS21259-14LH**	7/16	(5/8)-18	.781	.688	.592	.812	7.437	7.91	.468	4.011	.098	3.938	4.375	2.500	.625
MS21259-16RH	**MS21259-16LH**	1/2	(5/8)-18	.844	.750	.592	.875	8.187	8.75	.531	4.698	.125	4.625	5.093	2.500	.75
MS21259-18RH	**MS21259-18LH**	9/16	(3/4)-16	.984	.875	.717	1.000	9.125	9.72	.594	5.011	.125	4.938	5.468	3.000	1.00
MS21259-20RH	**MS21259-20LH**	5/8	(7/8)-14	1.109	1.000	.842	1.125	10.375	11.06	.656	5.511	.125	5.438	6.093	3.500	1.50
MS21259-24RH	**MS21259-24LH**	3/4	(1)-12	1.359	1.250	.967	1.438	12.063	12.64	.781	6.511	.125	6.438	7.188	4.000	2.75
MS21259-28RH	**MS21259-28LH**	7/8	(1 1/8)-12	1.593	1.437	1.092	1.625	13.226	13.99	.921	7.166	.125	7.094	7.846	4.500	3.90
MS21259-32RH	**MS21259-32LH**	1	(1 1/4)-12	1.812	1.625	1.217	1.812	14.969	15.88	1.046	8.229	.125	8.156	9.000	5.000	5.35

MS21259

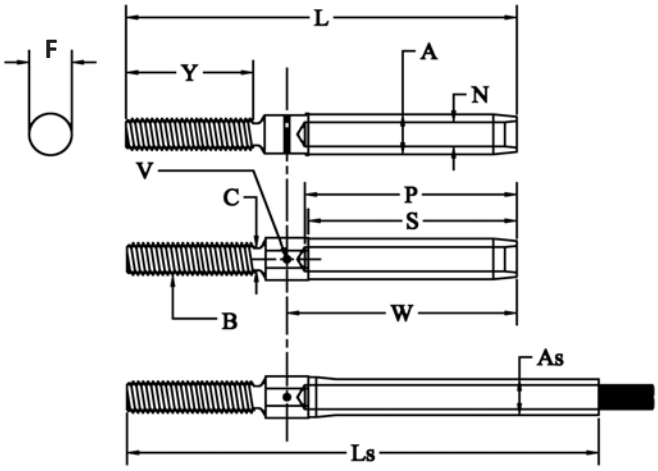

When ordering: Specify part no., direction of thread, and diameter of cable the hardware is to fit.

LOOS & CO. INC.
CABLEWARE® DIVISION
901 Industrial Blvd. Naples, FL 34104
(800) 321-LOOS (5667) | (239) 643-5667
Fax: (239) 643-4558 | sales@loosnaples.com
www.loosnaples.com

© Loos & Co., Inc. - 2022
901 Industrial Blvd., Naples FL 34104

WIRE ROPE TERMINALS

Locking Stud **MS21260**

(AN669 / NAS650) CORROSION-RESISTANT STEEL

SPECIFICATIONS

MS Part No. RH Thread	LH Thread	Cable Dia.	Thread B UN-3A UNF-3A	A Diam.	As Diam.	C +.006 -.000 Diam	F	G Max. Min.		L ±.063	Ls (Ref)	N Diam.	P	Q +.031 -.016	V ±.005	S +.062 -.000	W ±.016	Y ±.047	Lbs. per Piece
MS21260L2RH	MS21260L2LH	1/16	(# 6)-40	.160	.138	.092	.188	.1139	.1094	3.491	3.67	.078	1.042	1.319	.063	.969	1.174	.375	.011
MS21260S2RH	MS21260S2LH	1/16	(# 6)-40	.160	.138	.092	.188	.1139	.1094	2.616	2.79	.078	1.042	1.319	.063	.969	1.174	.375	.01
MS21260L3RH	MS21260L3LH	3/32	(# 10)-32	.218	.190	.133	.250	.1638	.1568	3.738	3.86	.109	1.261	1.581	.063	1.188	1.411	.500	.024
MS21260S3RH	MS21260S3LH	3/32	(# 10)-32	.218	.190	.133	.250	.1638	.1568	2.863	2.98	.109	1.261	1.581	.063	1.188	1.411	.500	.020
MS21260L4RH	MS21260L4LH	1/8	(1/4)-28	.250	.219	.195	.313	.2224	.2152	4.020	4.28	.141	1.511	1.863	.098	1.438	1.682	.563	.40
MS21260S4RH	MS21260S4LH	1/8	(1/4)-28	.250	.219	.195	.313	.2224	.2152	3.145	3.40	.141	1.511	1.863	.098	1.438	1.682	.563	.0236
MS21260L5RH	MS21260L5LH	5/32	(1/4)-28	.297	.250	.195	.313	.2224	.2152	4.314	4.66	.172	1.761	2.157	.098	1.688	1.958	.625	.05
MS21260S5RH	MS21260S5LH	5/32	(1/4)-28	.297	.250	.195	.313	.2224	.2152	3.439	3.78	.172	1.761	2.157	.098	1.688	1.958	.625	.044
MS21260L6RH	MS21260L6LH	3/16	(5/16)-24	.359	.313	.245	.375	.2830	.2754	4.612	4.78	.203	2.011	2.455	.098	1.938	2.237	.750	.086
MS21260S6RH	MS21260S6LH	3/16	(5/16)-24	.359	.313	.245	.375	.2830	.2754	3.737	3.90	.203	2.011	2.455	.098	1.938	2.237	.750	.070
MS21260-7RH	MS21260-7LH	7/32	(3/8)-24	.427	.375	.306	.438	.3454	.3378	4.914	5.21	.234	2.261	2.757	.098	2.188	2.518	.875	.130
MS21260-8RH	MS21260-8LH	1/4	(3/8)-24	.494	.438	.306	.500	.3454	.3378	5.218	5.52	.265	2.511	3.061	.098	2.438	2.784	.875	.170
MS21260-9RH	MS21260-9LH	9/32	(7/16)-20	.563	.500	.361	.625	.4052	.3972	5.542	5.90	.297	2.761	3.385	.098	2.688	3.076	1.00	.22
MS21260-10RH	MS21260-10LH	5/16	(1/2)-20	.635	.563	.406	.688	.4678	.4597	5.875	6.30	.328	3.011	3.718	.098	2.938	3.326	1.00	.35
MS21260-12RH	MS21260-12LH	3/8	(9/16)-18	.703	.625	.476	.750	.5285	.5201	6.608	7.01	.404	3.511	4.281	.098	3.438	3.828	1.125	.50
MS21260-14RH	MS21260-14LH	7/16	(5/8)-18	.781	.688	.538	.812	.5909	.5826	7.468	7.94	.468	4.011	4.812	.098	3.938	4.375	1.250	.625
MS21260-16RH	MS21260-16LH	1/2	(5/8)-18	.844	.750	.538	.875	.5909	.5826	8.718	9.28	.531	4.698	5.562	.125	4.625	5.093	1.250	.750
MS21260-18RH	MS21260-18LH	9/16	(3/4)-16	.984	.875	.654	1.000	.7137	.7050	9.188	9.78	.594	5.011	6.000	.125	4.938	5.468	1.500	1.00
MS21260-20RH	MS21260-20LH	5/8	(7/8)-14	1.109	1.000	.768	1.125	.8558	.8266	10.469	11.16	.656	5.511	6.750	.125	5.438	6.093	1.750	1.50
MS21260-24RH	MS21260-24LH	3/4	(1)-12	1.359	1.25	.893	1.438	.9608	.9516	12.188	12.76	.781	6.511	7.938	.125	6.438	7.188	2.000	2.75
MS21260-28RH	MS21260-28LH	7/8	(1 1/8)-12	1.593	1.437	1.002	1.625	1.0819	1.0772	12.851	13.61	.921	7.166	8.601	.125	7.094	7.846	2.000	3.90
MS21260-32RH	MS21260-32LH	1	(1 1/4)-12	1.812	1.625	1.128	1.812	1.2069	1.1972	14.624	15.53	1.046	8.229	9.844	.125	8.156	9.000	2.250	5.35

AN669 same as MS21260 but without slotted end

MS21260

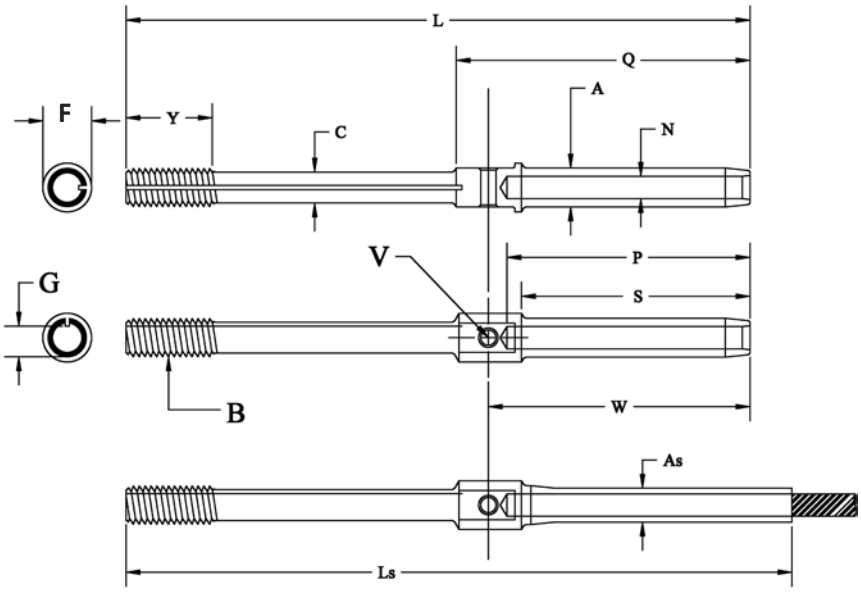

When ordering: Specify part no., direction of thread, and diameter of cable the hardware is to fit.

© Loos & Co., Inc. - 2022
901 Industrial Blvd., Naples FL 34104

LOOS & CO. INC.
CABLEWARE® DIVISION
901 Industrial Blvd. Naples, FL 34104
(800) 321-LOOS (5667) | (239) 643-5667
Fax: (239) 643-4558 | sales@loosnaples.com
www.loosnaples.com

WIRE ROPE TERMINALS

MS21251

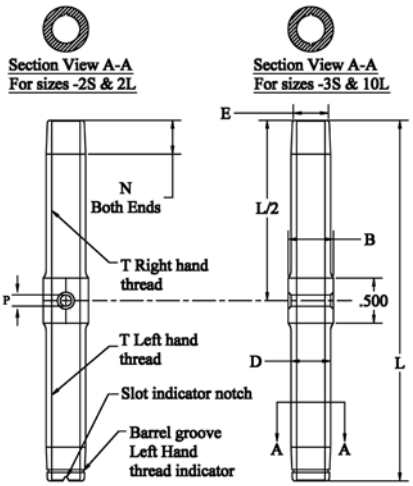

Turnbuckle Body **MS21251**

CLIP LOCKING (Same as NAS649)

AVAILABLE IN BRASS, STEEL, & ALUMINUM BY REQUEST.

SPECIFICATIONS

DASH No.			Wire Rope Dia. Ref.	Min. Breaking Strength	Thread T UNF-38	L ±.031	B ±.005 Dia.	N ±.031	D ±.005 Dia.	E ±.005 Dia.	P ±.005	Ap-plicable locking Clip	Lbs. Per Piece
Steel	Brass	Alum.											
-2S	B2S	A2S	1/16	800	No. 6-40	2.25	.250	.156	.219	.188	.125	-1	.018
-2L	B2L	A2L				4.000						-2	.034
-3S	B3S	A3S	3/32	1600	No. 10-32	2.250	.344	.188	.281	.250		-1	.031
-3L	B3L	A3L				4.000						-2	.050
-5S	B5S	A5S	5/32	3200	1/4-28	2.250	.438	.312	.391	.328		-1	.052
-5L	B5L	A5L				4.000						-2	.0197
-6S	B6S	A6S	3/16	4600	5/16-24	2.250	.500	.375	.438	.406		-1	.063
-6L	B6L	A6L				4.000						-2	.106
-8L	B8L	A8L	1/4	8000	3/8-24		.625	.500	.594	.469		-2	.409
-9L	B9L	A9L	9/32	12500	7/16-20	4.25	.750	.594	.688	.563	.188	-3	.296
-10L	B10L	A10L	5/16	17500	1/2-20		.875	.656	.813	.625		-3	.413

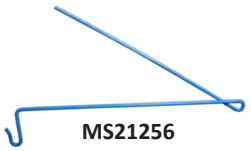

MS21256

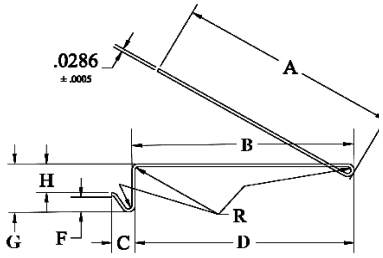

Clip, Locking Turnbuckle **MS21256**

(Same as NAS651, Boeing BACC15AJ and Loos B15AJ)

CORROSION-RESISTANT STEEL

SPECIFICATIONS

Dash No.	A	B	C +.010 -.015	D	F	G	H	R RAD	Lbs. Per 1000
-1	.965	1.115	.150	1.078	.125	.300	.165	.032	.466
-2	1.875	2.000		1.955		.315	.180		.59
-3	2.045	2.140	.215	2.015	.150	.430	.275		.905

MS21252C

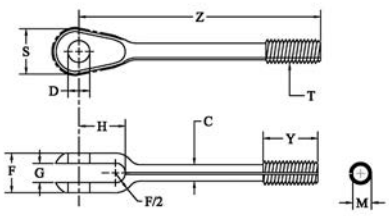

MS21252C 17-4PH Stainless Steel

(Same as NAS645) (Replaces AN161)

ALSO AVAILABLE IN 4130 HT CADMIUM-PLATED

SPECIFICATIONS

Dash No. direction of Thread		J Wire Rope Dia. Ref.	Min. Breaking Strength	Thread T UNF-3A	C +.006 -.000	D +.002 -.000 Dia.	F +.010 -.0005	G +.010 -.000 Dia.	H	M		S Sper Dia.	Y ±.047	Z ±.047
RH	LH									Max	Min			
2RS	2LS	1/16	800	No. 6-40	.094	.190	.250	.109	.375	.1139	.1094	.375	.375	1.500
3RS	3LS	3/32	1600	No. 10-32	.133	.190	.319	.156		.1638	.1568	.500	.500	1.625
3RL	3LL													2.500
4RS	4LS	1/8	2200	1/4-28	.189	.190	.383	.195	.531	.2224	.2152	.547	.563	1.844
4RL	4LL													2.734
5RS	5LS	5/32	3200	1/4-28	.189	.250	.452	.218	.531	.2224	.2152	.641	.625	1.844
5RL	5LL													2.734
6RS	6LS	3/16	4600	5/16-24	.243	.313	.547	.250	.656	.2830	.2754	.734	.750	2.031
6RL	6LL													2.906
8RL	8LL	1/4	8000	3/8-24	.306	.375	.687	..312	.875	.3454	.3378	.922	.875	3.188
9RL	9LL	9/32	12500	7/16-20	.362	.438	.750	.375	1.00	.4052	.3972	1.094	1.00	3.438
10RL	10LL	5/16	17500	1/2-20	.425	.500	.844	.437	1.188	.4678	.4597	1.219		3.688

When ordering: Specify part no., direction of thread, and diameter of cable the hardware is to fit.

LOOS & CO INC
CABLEWARE® DIVISION
901 Industrial Blvd. Naples, FL 34104
(800) 321-LOOS (5667) | (239) 643-5667
Fax: (239) 643-4558 | sales@loosnaples.com
www.loosnaples.com

© Loos & Co., Inc. - 2022
901 Industrial Blvd., Naples FL 34104

WIRE ROPE TERMINALS

MS21254C 17-4PH STAINLESS STEEL

ALSO AVAILABLE IN 4130 HT CADMIUM-PLATED

(Same as NAS648) (Replaces AN165)

MS21254C

NOTE: Use Dash -5 parts with 1/8" diameter wire rope

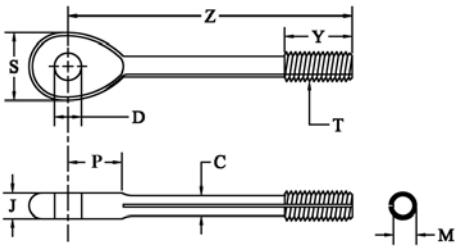

SPECIFICATIONS

DASH No. direction of Thread		J Wire Rope Dia. Ref.	Min. Breaking Strength	Thread T UNF-3A	C +.006 -.000	D +.002 -.000 Dia.	J ±.005	M		S Dia.	Y ±.047	Z +.031 -.015	P ±.031
RH	LH							Max	Min				
2RS	2LS	1/16	800	No. 6-40	.094	.190	.125	.1139	.1094	.375	.375	1.500	.325
2RL	2LL											2.375	
3RS	3LS	3/32	1600	No. 10-32	.133		.188	.1638	.1568	.500	.500	1.625	.416
3RL	3LL											2.500	
5RS	5LS	5/32	3200	1/4-28	.189	.250	.219	.2224	.2152	.625	.625	1.750	.512
5RL	5LL											2.625	
6RS	6LS	3/16	4600	5/16-24	.243	.313	.281	.2830	.2754	.688	.750	1.875	.527
6RL	6LL											2.750	
8RL	8LL	1/4	8000	3/8-24	.306	.375	.328	.3454	.3378	.875	.875	2.875	.678
9RL	9LL	9/32	12500	7/16-20	.362	.438	.375	.4052	.3972	1.063	1.000	3.375	.831
10RL	10LL	5/16	17500	1/2-20	.425	.500	.469	.4678	.4597	1.188	1.000	3.625	.900

MS21255C 17-4PH STAINLESS STEEL

ALSO AVAILABLE IN 4130 HT CADMIUM-PLATED

(Same as NAS647) (Replaces AN170)

MS21255C

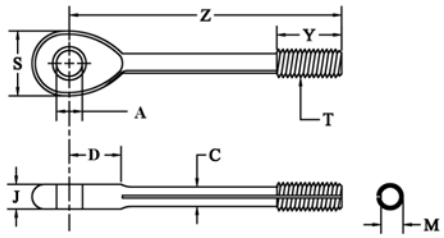

SPECIFICATIONS

Dash No. Direction of Thread		Cable Dia.	Min Breaking Strength LB	Thread T UNF-3A	A +.010 -.000 Dia.	C +.006 -.000	D ±.031	J ±.005	M		S Dia.	Y ±.047	Z +.031 -.015
RH	LH								Max	Min			
2RS	2LS	1/16	800	6-40	.188	.094	.325	.125	.1139	.1094	.375	.375	1.500
2RL	2LL												2.375
3RS	3LS	3/32	1600	10-32	.219	.133	.416	.188	.1638	.1568	.500	.500	1.625
3RL	3LL												2.500
5RS	5LS	5/32	3200	1/4-28	.281	.189	.512	.219	.2224	.2152	.625	.625	1.750
5RL	5LL												2.625
6RS	6LS	3/16	4600	5/16-24	.313	.243	.527	.281	.2830	.2754	.688	.750	1.875
6RL	6LL												2.750
8RL	8LL	1/4	8000	3/8-24	.375	.306	.678	.328	.3454	.3378	.875	.875	2.875
9RL	9LL	9/32	12500	7/16-20	.469	.362	.831	.375	.4052	.3972	.1063	1.000	3.375
10RL	10LL	5/16	17500	1/2-20	.563	.425	.900	.469	.4678	.4597	1.188		3.625

AN111

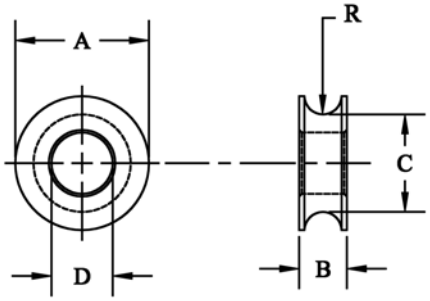

AN111 CABLE BUSHING

SPECIFICATIONS

AN111 - CORROSION-RESISTANT STEEL

PART #	Cable Diameter	A Dia.	B +/-	C Dia.	D +/-	R Rad. +/-
AN111-C3	1/16, 3/32	.437	.156	.343	.187	.046
AN111-C4	1/8	.468	.187	.343	.187	.062
AN111-C5	5/32	.562	.218	.406	.250	.078
AN111-C6	3/16	.687	.250	.500	.312	.093

When ordering: Specify part no. and diameter of cable hardware it is to fit.

© Loos & Co., Inc. - 2022

901 Industrial Blvd., Naples FL 34104

LOOS & CO. INC.
CABLEWARE® DIVISION
901 Industrial Blvd. Naples, FL 34104
(800) 321-LOOS (5667) | (239) 643-5667
Fax: (239) 643-4558 | sales@loosnaples.com
www.loosnaples.com

WIRE ROPE TERMINALS

AN100

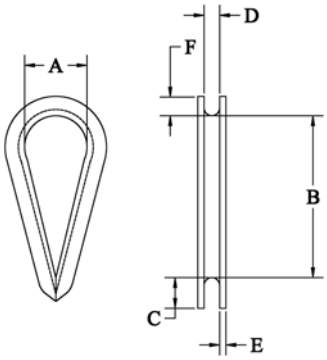

AN100 THIMBLES

Cold Rolled Steel Zinc-Plated	Stainless Steel Part No.	To fit Cable Dia.	A	B	Dimensions				Wt. Per 1,000
					C	D	E	F	
AN100-3	AN100-C3	3/64, 1/16, 5/64, 3/32	.350	45/64	3/16	3/32	.032	5/64	1.5
AN100-4	AN100-C4	3/32, 7/64, 1/8	.350	45/64	7/32	9/64	.032	5/64	4.3
AN100-5	AN100-C5	5/32	.400	51/64	7/32	11/64	.032	7/64	6
AN100-6	AN100-C6	3/16	.500	1	5/16	13/64	.032	9/64	9.8
AN100-8	AN100-C8	7/32, 1/4	.700	1-13/32	13/32	17/64	.032	11/64	15
AN100-10	AN100-C10	9/32, 5/16	.900	1-51/64	7/16	21/64	.040	7/32	35
AN100-12	AN100-C12	3/8	1.000	2	5/8	25/64	.060	17/64	85

AN thimbles come in either cold-rolled steel (zinc-plated) or stainless steel (natural finish). Fit cable diameters from 1/16" to 3/8" to meet the most demanding marine, aircraft or industrial requirements.

EY18

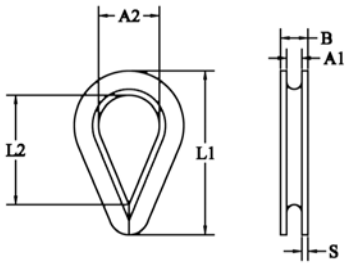

HEAVY-DUTY STAINLESS STEEL THIMBLES **EY18**

(Type 316 Stainless Steel)

Part No.	To Fit Cable Dia.	A1	A2	B	L1	L2	Thickness Comparison		Weight Each and Comparison	
							Heavy-Duty (S)	AN Type (E)	Heavy-Duty	AN Type
EY18-3	3/32	1/8	3/8	3/16	7/8	5/8	1/32	1/32	.41	.36
EY18-4	1/8	5/32	3/8	7/32	1	11/16	1/32	1/32	.65	.43
EY18-5	5/32	3/16	7/16	9/32	1 1/8	3/4	3/64	1/32	1.16	.57
EY18-6	3/16	7/32	1/2	5/16	1 1/4	7/8	3/64	1/32	1.45	.99
EY18-8	1/4	9/32	19/32	3/8	1 1/2	1 1/16	1/16	1/32	2.51	1.61
EY18-9	9/32	5/16	3/4	7/16	1 3/4	1 1/4	1/16	1/32	4.52	3.23
EY18-10	5/16	3/8	7/8	1/2	2	1 1/2	5/64	3/64	5.72	3.23
EY18-12	3/8	7/16	15/16	9/16	2 5/16	1 3/4	5/64	3/64	7.11	7.93
EY18-16	1/2	9/16	1 1/8	3/4	2 3/4	2 1/8	3/32	1/16	14.01	-

NOTE: EY18-3 will fit 1/16” wire rope, EY18-6 will fit 7/32” wire rope

EY411

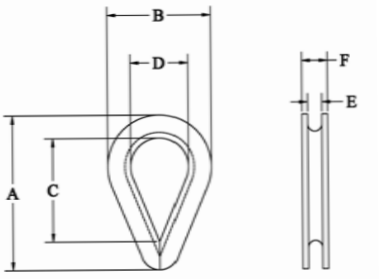

Dimensions are approximate.

STANDARD GALVANIZED WIRE ROPE THIMBLES **EY411**

Pat No.	Cable Dia.	A	B	C	D	F	E	Wt. Lbs. per
EY411-4	1/8	2	1-1/8	1-3/8	5/8	9/32	5/32	3.5
EY411-6	3/16	2	1-1/8	1-3/8	5/8	11/32	1/4	3.5
EY411-8	1/4	2	1-1/8	1-7/16	11/16	3/8	5/16	3.5
EY411-10	5/16	2-1/8	1-1/4	1-1/2	13/16	15/32	3/8	5
EY411-12	3/8	2-3/8	1-1/2	1-11/16	1	17/32	7/16	7
EY411-14/16	7/16, 1/2	2-11/16	1-3/4	1-15/16	1-1/8	11/16	9/16	13
EY411-18/20	9/16, 5/8	3-1/2	2-3/8	2-1/4	1-7/16	15/16	11/16	35
EY411-24	3/4	3-3/4	2-3/4	2-11/16	1-5/8	1-1/8	13/16	50
EY411-28	7/8	5	3-1/8	3-9/16	1-7/8	1-9/32	1	88
EY411-32	1	5-3/4	3-11/16	4-1/4	2-1/2	1-13/32	1-1/8	104

Non-stock items subject to reasonable delivery, depending on current manufacturing lead time.
When ordering: Specify part no. and diameter of cable hardware it is to fit.

LOOS & CO. INC.
CABLEWARE® DIVISION
901 Industrial Blvd. Naples, FL 34104
(800) 321-LOOS (5667) | (239) 643-5667
Fax: (239) 643-4558 | sales@loosnaples.com
www.loosnaples.com

© Loos & Co., Inc. - 2022
901 Industrial Blvd., Naples FL 34104

WIRE ROPE TERMINALS

HEAVY-DUTY GALVANIZED WIRE ROPE THIMBLES **EY414**

EY414

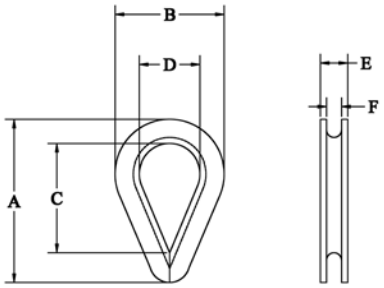

Part No.	Cable Dia.	A	B	C	D	E	F	Wt. Lbs per 100
EY414-8	1/4	2-1/4	1-1/2	1-5/8	7/8	15/32	5/16	8
EY414-10	5/16	2-5/8	1-13/16	1-7/8	1-1/16	17/32	3/8	14
EY414-12	3/8	3	2-1/8	2-1/8	1-1/8	21/32	7/16	25
EY414-14	7/16	3-1/2	2-5/16	2-5/16	1-1/4	3/4	1/2	36
EY414-16	1/2	3-5/8	2-3/4	2-3/4	1-1/2	15/16	9/16	51
EY414-18	9/16	3-5/8	2-11/16	2-3/4	1-1/2	15/16	5/8	51
EY414-20	5/8	4-1/4	3-1/8	3-1/4	1-3/4	1-1/32	11/16	75
EY414-24	3/4	5	3-13/16	3-3/4	2	1-1/4	13/16	147
EY414-28	7/8	5-1/2	4-1/4	4-1/4	2-1/4	1-7/16	1	185
EY414-32	1	6-1/8	4-15/16	4-1/2	2-1/2	1-11/16	1/18	300

WIRE ROPE NET CLIP - **CP3**

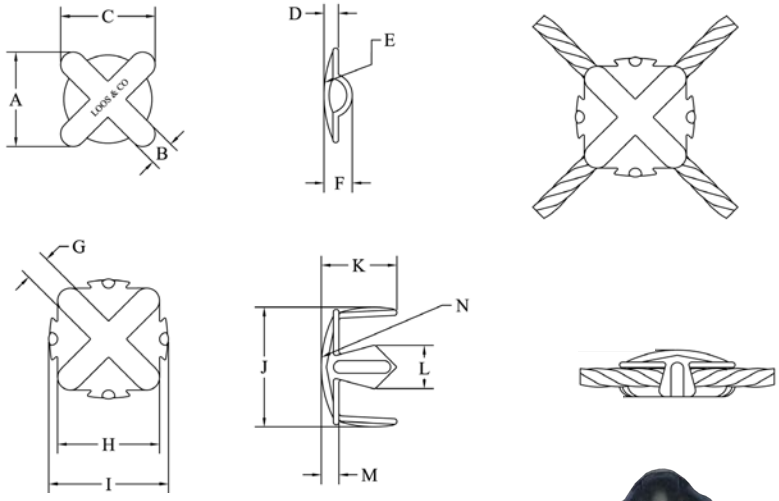

Net clips were designed specifically for use on steel cables. They are used by the U.S. Navy and Coast Guard to fabricate safety nets and have found wide acceptance whenever wire rope nets are needed. The one size available will accept “cross-overs” of 7x7 or 7x19 construction cable in unjacketed cable diameters of 5/32, 3/16, 7/32, and 1/4 . Net clips are available in stainless steel.

Order by part number.

CP3

Part No.	Description	Wt. per M sets
CP3-2	Stainless Steel Net Clip	44.5 lbs.

A	B	C	D	E	F	G	H	I	J	K	L	M	N
15/16	1/4	15/16	3/16	1-1/8R	9/32	1/4	15/16	1-3/16	1-3/16	3/4	7/16	3/16	1-1/8R

© Loos & Co., Inc. - 2022
901 Industrial Blvd., Naples FL 34104

LOOS & CO. INC.
CABLEWARE® DIVISION
901 Industrial Blvd. Naples, FL 34104
(800) 321-LOOS (5667) | (239) 643-5667
Fax: (239) 643-4558 | sales@loosnaples.com
www.loosnaples.com

STAINLESS STEEL SAFETY/LOCKING WIRE

NET CLIP TOOL

PART NO. **#1-N**

- Weight: 12 lbs.
- Base Height: 4”
- Base Diameter: 3.5”
- Overall height 8”

STAINLESS STEEL **SAFETY/LOCKING WIRE**

Used for aircraft to secure all bolts, nuts, or hardware subject to vibrations. Better than a cotter pin, a thousand uses around the home, farm, or factory. Always available from stock in these popular sizes and packages.

TYPE 302/304 STAINLESS STEEL - CONDITION A

MEETS MIL SPEC. MS20995 & GOVT. SPEC. QQW-423

Part No.	Ft. per Spool	Lbs. per Spool
SLW10B-041	10.00	
SLWQ020	234.5	1/4
SLWQ032	91.5	
SLWQ041	55.75	
SLW020	937	1
SLW032	366	
SLW041	223	
SLW10-20	9370	10
SLW10-32	3660	
SLW10-41	2230	

10 ft. Spool

1/4 lb. Spool

1 lb. Spool

Non-stock items subject to reasonable delivery, depending on current manufacturing lead time.
When ordering: Specify part no. and diameter of cable hardware it is to fit.

LOOS & CO. INC.
CABLEWARE® DIVISION
901 Industrial Blvd. Naples, FL 34104
(800) 321-LOOS (5667) | (239) 643-5667
Fax: (239) 643-4558 | sales@loosnaples.com
www.loosnaples.com

© Loos & Co., Inc. - 2022
901 Industrial Blvd., Naples FL 34104

WIRE ROPE TERMINALS

MALLEABLE WIRE ROPE CLIPS/GALVANIZED **CP2**

CP2

Part Number	To Fit Cable Dia.	To give Maximum Strength	Estimated Weight per 100 in lbs.
CP2-4P	1/8	2	3.0
CP2-6P	3/16	2	6.0
CP2-8P	1/4	3	12.7
CP2-10P	5/16	3	13.2
CP2-12P	3/8	4	20.4
CP2-14P	7/16	4	22.0
CP2-16P	1/2	4	35.0

Wire rope clips of the type on this page are not to be used on a plastic-coated cable without first stripping off plastic. Wire rope clips must be installed over bare cable only.

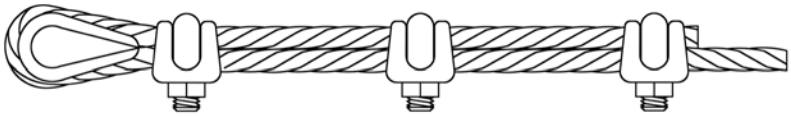

Right Way

Malleable, galvanized wire rope clips. Standard clips are designed for maximum holding strength. Heavy-duty construction throughout. For in between sizes such as 5/32", 7/32", etc., use next larger size clip.

WIRE ROPE CLIPS (STAINLESS) **CP7**

Available in Type 304 or 316

(Ref. dimensions in inches except nut Ssze)

CP7

Part No.	A	B	C	D	E	Weight Per 100 pcs.
CP7-2	1/16, 3/32	.09	.40	.52	.55	2
CP7-4	1/8	.12	.43	.55	.62	2
CP7-5	5/32	.15	.56	.70	.73	4
CP7-6	3/16	.19	.67	.78	.87	6
CP7-8	7/32, 1/4	.23	.75	.84	1.11	9
CP7-10	9/32, 5/16	.31	.90	1.06	1.34	1.7
CP7-12	3/8	.38	1.00	1.2	1.74	3.6

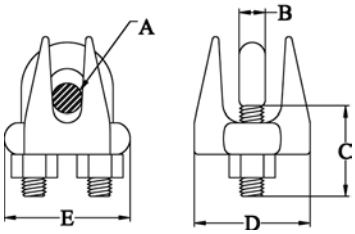

Rugged stainless steel saddles with grooved deep recess to hold cable securely. Stainless steel U-bolt and nuts. Use clips as recommended above (under “Malleable Clips”) to give maximum strength.

NOTE: The nuts on these clips are metric sizes

© Loos & Co., Inc. - 2022
901 Industrial Blvd., Naples FL 34104

LOOS & CO. INC.
CABLEWARE® DIVISION
901 Industrial Blvd. Naples, FL 34104
(800) 321-LOOS (5667) | (239) 643-5667
Fax: (239) 643-4558 | sales@loosnaples.com
www.loosnaples.com

TO FIT CABLE DIA.		ALUMINUM OVAL SLEEVES	COPPER OVAL SLEEVES	COPPER OVAL SLEEVES ZINC-PLATED	COPPER OVAL SLEEVES TIN-PLATED	ALUMI-NUM STOP SLEEVES	COPPER STOP SLEEVES
1/32	Part No.	Available in Copper Only	SL2-1	SL2-1P	SL2-1TP	Available in Copper Only	ST2-1
	Use Tool No.		000-WCI, #1-3-SBHS, or #5-H				000-WCI or #5-H
	Wgt. Lbs./M pcs.		*.6*	*.6*	*.6*		*.8*
3/64	Part No.	SL1-1.5	SL2-1.5	SL2-1.5P	SL2-1.5TP	Available in Copper Only	ST2-1.5
	Use Tool No.	000-WCI, 0-1.5-3FS, #1-3-SBHS, 0-3/64SC, or #5-H					000-WCI, 0-1.5-3FS, 0-3/64SC, or #5-H
	Wgt. Lbs./M pcs.	*.6*	*2*	*2*	*2*		*1.5*
1/16	Part No.	SL1-2	SL2-2	SL2-2P	SL2-2TP	ST1-2	ST2-2
	Use Tool No.	000-WCI, 0-1.5-3FS, #1-3-SBHS, 0-1/16SC, #1-BSC, #1-P, HC, SL-7NDK-R, or #5-H				000-WCI, SL-7NDK-R, or #-4H	
	Wgt. Lbs./M pcs.	*.8*	*2.5*	*2.5*	*2.5*	*.4*	*2*
3/32	Part No.	SL1-3	SL2-3	SL2-3P	SL2-3TP	ST1-3	ST2-3
	Use Tool No.	0-1.5-3FS, 0-3/32SC, #1-3-SBHS, #1-SC, #1-P, #1-BSC, SL-7NDK-R , or #5-H				0-1.5-3-FS, 0-3/32SC, #1-SC, #1-BSC, #1-P, SL-7NDK-R , or #5-H	
	Wgt. Lbs./M pcs.	*2.5*	*6*	*6*	*6*	*2.5*	*8*
1/8	Part No.	SL1-4	SL2-4	SL2-4P	SL2-4TP	ST1-4	ST2-4
	Use Tool No.	0-1/8SC, #1-SC, #1-BSC, #1-P, SL-7NDK-R , or #5-H				0-1.5-3-FS, 0-3/32SC, #1-SC, #1-BSC, #1-P, SL-7NDK-R , or #5-H	
	Wgt. Lbs./M pcs.	*5.8*	*16*	*16*	*16*	*2.3*	*7*
5/32	Part No.	SL1-5	SL2-5	SL2-5P	SL2-5TP	ST1-5	ST2-5
	Use Tool No.	0-5/32SC, #1-SC, #1-BSC, #1-P, SL-7NDK-R, or #5-H				0-1/8SC, #1-SC, #1-BSC, #1-P, SL-7NDK-R, or #5-H	
	Wgt. Lbs./M pcs.	*7*	*23*	*23*	*23*	*4*	*12*
3/16	Part No.	SL1-6	SL2-6	SL2-6P	SL2-6TP	ST1-6	ST2-6
	Use Tool No.	0-3/16SC, #1-SC, #1-BSC, #1-P, SL-7NDK-R, or #5-H				0-1/8SC, #1-SC, #1-BSC, #1-P, SL-7NDK-R, or #5-H	
	Wgt. Lbs./M pcs.	*14.5*	*53*	*53*	*53*	*3.5*	*10.5*
7/32	Part No.	SL1-7	SL2-7	SL2-7P	SL2-7TP	ST1-7	ST2-7
	Use Tool No.	0-7/32, SL-7NDK-R, or #5-H				0-1/8SC, #1-SC, #1-BSC, #1-P, SL-7NDK-R, or #5-H	
	Wgt. Lbs./M pcs.	*21*	*45.5*	*46*	*46*	*6.7*	*18.6*
1/4	Part No.	SL1-8	SL2-8	SL2-8P	SL2-8TP	ST1-8	ST2-8
	Use Tool No.	0-1/4, #3-H, SL-7NDK-R, SL-C7510, or #5-H					
	Wgt. Lbs./M pcs.	*28*	*76*	*78*	*78*	*21*	*61*
9/32	Part No.	SL1-9					
	Use Tool No.	0-9/32, SL-7NDK-R, or #5-H					
	Wgt. Lbs./M pcs.	*28.5*					
5/16	Part No.	SL1-10	SL2-10	SL2-10P	SL2-10TP	Available in Copper Only	ST2-10
	Use Tool No.	0-5/16, #3-H, SL-7NDK-R, SL-C7510, or #5-H					0-1/4, #3-H, #5-H, or SL-7NDK-R
	Wgt. Lbs./M pcs.	*41*	*122*	*124*	*124*		*52*
3/8	Part No.	SL1-12	SL2-12	SL2-12P	SL2-12TP	Available in Copper Only	ST2-12
	Use Tool No.	SL-C7510, #3-H, or #5-H					0-1/4, #3-H, #5-H, or SL-7NDK-R
	Wgt. Lbs./M pcs.	*57*	*156*	*158*	*158*		*44*
7/16	Part No.	SL1-14	SL2-14	SL2-14P	SL2-14TP	**Special lengths of either copper or aluminum oval and stop sleeves available on special order.**	
	Use Tool No.	SL-C7510, #3-H, or #5-H					
	Wgt. Lbs./M pcs.	*116*	*282*	*284*	*284*		
1/2	Part No.	SL1-16	SL2-16	SL2-16P	SL2-16TP		
	Use Tool No.	SL-C7510, #3-H, or #5-H					
	Wgt. Lbs./M pcs.	*172*	*384*	*386*	*386*		

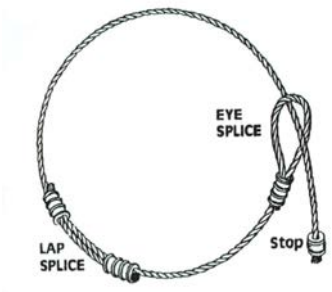

LOCOLOC® OVAL AND STOP SLEEVES

(ONLY COPPER OVAL SLEEVES CONFORM TO MILITARY SPEC. MS51844.)

Sleeves for eye, lap, and stop sleeve splicing are available in either aluminum or copper in a wide variety of sizes ranging from 1/32" to 1/2" inclusive. **All oval sleeves (copper or aluminum) are capable of supporting a greater load than the rated breaking strength of the cable to which they are attached when properly applied with Locoloc® hand swager to bare cable on 3x7, 7x7, 7x19, and 6x19 constructions.** Stop sleeves capable of holding only 1/3 to 1/2 of the rated breaking strength of the cable to which they are attached. All sizes and types are bulk packaged. Copper oval sleeves available either plain, zinc-, nickel-, or tin-plated. Plain copper supplied unless otherwise specified.

Aluminum Sleeves and Stops are inspected and accepted to ANSI acceptance level 6.5.

LOOS & CO. INC.
CABLEWARE® DIVISION
901 Industrial Blvd. Naples, FL 34104
(800) 321-LOOS (5667) | (239) 643-5667
Fax: (239) 643-4558 | sales@loosnaples.com
www.loosnaples.com

© Loos & Co., Inc. - 2022
901 Industrial Blvd., Naples FL 34104

WIRE ROPE TERMINALS

LOCOLOC® STAINLESS STEEL OVAL SLEEVES **SL11**

Locoloc® stainless steel oval sleeves make it simple and easy to lap- and eye-splice stainless cable and wire rope. Ideal for general outdoor, marine, corrosive, and other harsh environments. Conforms to Mil-Spec MS51844.

SL11

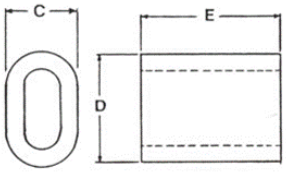

Part Number	Cable Dia.	Reference Dimensions			Use Tool Number	Approx. Part Wt. (Lbs/M)
		C	D	E ± 1/32		
SL11-1	1/32	3/32	9/64	1/4	#1-3-SBHS (DI4-1)	.40
SL11-1.5	3/64	1/8	13/64	3/8	0-3/64SC or #5-H (DI4-1.5)	1.6
SL11-2	1/16	9/64	7/32	3/8	0-3/64SC or #5-H (DI4-1.5)	1.5
SL11-3	3/32	11/64	9/32	3/8	0-1/16SC or #5-H (DI4-2)	1.7
SL11-4	1/8	7/32	3/8	3/8	0-3/32SC, SL-7NDK-R, or #5-H (DI4-3)	3.7
SL11-5	5/32	5/16	31/64	47/64	0-1/8SC, SL-7NDK-R, or #5-H (DI4-4)	14.1
SL11-6	3/16	11/32	35/64	63/64	0-5/32SC, SL-7NDK-R, or #5-H (DI4-5)	22.8
SL11-7	7/32	27/64	21/32	7/8	0-3/16SC, SL-7NDK-R, or #5-H (DI4-6)	31.4
SL11-8	1/4	7/16	45/64	1 9/64	0-7/32, SL-7NDK-R, or #5-H (DI4-7)	44.30
SL11-10	5/16	9/16	7/8	1 3/8	0-9/32, SL-7NDK-R, SL-C7510, #3-H (HD3-8), #5-H (DI4-9)	76.32
SL11-12	3/8	5/8	1 1/32	1 3/8	SL-7NDK-R, SL-C7510, or #5-H (DI4-10)	102.50

LOCOLOC® THIN WALL ALUMINUM OVAL SLEEVES FOR ROPE - **SL1- R**

For use on hemp, manilla, nylon, dacron, cotton, and all types of fiber or synthetic ropes, bungee cord, and plastic-coated cables. Note: We neither guarantee nor do we imply the holding strength of these sleeves because the breaking strength of the various materials on which they are used, the physical properties, tensile strengths, hardness, stretch factors, and end uses are too vast and varied to cover all applications. We will supply samples for you to test or will perform test if you supply samples of material on which you wish to use these sleeves and will determine maximum holding strengths for your specific application. Length of sleeves can be extended to increase holding strengths or multiple sleeves can be used to develop greater holding strengths.

SL1- R

Part No.	To fit Rope Diam.	Use Locoloc® Tool No.	Standard Length:	Wgt. Per M/Pcs.
SL1-3R	1/8	#1-SC, 0-3/32SC, or #5-H (DI4-3)	1/2	2 lbs.
SL1-4R	5/32	#1-SC, 0-1/8SC, or #5-H (DI4-4)	5/8	3.7 lbs.
SL1-5R	3/16	#1-SC, 0-5/32SC, or #5-H (DI4-5)	11/16	4.7 lbs
SL1-6R	1/4	#1-SC, 0-3/16SC, or #5-H (DI4-6)	1	9.2 lbs
SL1-7R	5/16	0-7/32SC, #5-H (DI4-7)	1-1/16	14.7 lbs.
SL1-8R	3/8	#5-H (DI4-8)	1-1/8	15.7 lbs
SL1-10R	7/16	#5-H (DI4-10)	1-1/4	28.6 lbs.
SL1-12R	1/2	#5-H (DI4-12)	1-7/16	39 lbs.

When ordering: Specify part no. and diameter of cable hardware it is to fit. Aluminum Sleeves and Stops are inspected and accepted to ANSI acceptance level 6.5.

GA-4 (Front)

GA-4 (Back)

CABLE DIAMETER GAUGE

To quickly determine diameter of any cable (up to and including 3/8" or 10 mm) this simple gauge does the trick. Merely slip it over a cable and when the cable fits snugly in the "V" slot, note the diameter printed on the gauge. One side reads in fractions of an inch, the other side in millimeters.

Very inexpensive insurance to eliminate using wrong size cable. Order several for all your workmen. Easily carried in pocket or wallet. Lightweight and corrosion-resistant.

Part No.	Wgt. Ea
GA-4	1/4 oz

These gauges make ideal "give away" items for advertising purposes. We will supply them in quantity at very inexpensive cost, in your colors and with your message. Write for details.

© Loos & Co., Inc. - 2022
901 Industrial Blvd., Naples FL 34104

LOOS & CO INC.
CABLEWARE® DIVISION
901 Industrial Blvd. Naples, FL 34104
(800) 321-LOOS (5667) | (239) 643-5667
Fax: (239) 643-4558 | sales@loosnaples.com
www.loosnaples.com

LOCOLOC® HANDSWAGERS

Eye, lap and stop sleeve splicing of cables up to 1/2" diameter are made sure and easy with the new hand swagers. Design features "over-center" leverage, which transmits a powerful snap-action to the final thrust of the jaws... assures a tight, clean compression every time. Easy adjustment. Individual replacement parts are available for all models. Parts list included with each tool. Gauge included with each tool.

LOCOLOC® **000-WCI** HAND SWAGER

Small, compact, can be carried in your pocket. Swages 1/32", 3/64", and 1/16" copper or aluminum oval and stop sleeves only.
Has built in cable cutter. Packaged in plastic pouch. 10" long, wt. 12 oz.

LOCOLOC® **0-1.5-3FS** HAND SWAGER

Swages 3/64", 1/16" and 3/32" oval and stop sleeves, plus 1/8" stop sleeves. Full width jaws allow you to do full swages with only one compression. 14" long, 3.6 lbs.

LOCOLOC® **#1-3-SBHS** HAND SWAGER

This tool is an outstanding small handheld tool, and it does a great job of swaging small sleeves. This is a (4) cavity tool, swaging sleeve sizes 1/32", 3/64", 1/16", and 3/32". Ratchet mechanism will not release until swage is complete. Swages copper and aluminum sleeves only. Usage instructions and swage gauge included in each tool. 12” long.

LOCOLOC® **#0-3-SBHS-R** HAND SWAGER

This tool is an outstanding small handheld tool, and it does a great job of swaging small sleeves.
This is a (1) cavity tool, swages sleeve size 3/32" copper and aluminum sleeves. Ratchet mechanism will not release until swage is complete.

LOOS & CO. INC.
CABLEWARE® DIVISION
901 Industrial Blvd. Naples, FL 34104
(800) 321-LOOS (5667) | (239) 643-5667
Fax: (239) 643-4558 | sales@loosnaples.com
www.loosnaples.com

© Loos & Co., Inc. - 2022
901 Industrial Blvd., Naples FL 34104

LOCOLOC® HANDSWAGERS

LOCOLOC® **0-SC** HAND SWAGERS

Single compression die for oval and stop sleeve swaging.

P/N: **0-3/64SC** - swages 3/64" oval and stop sleeves, plus 3/64" and 1/16" stainless steel oval sleeves.

P/N:**0-1/16SC** - swages 1/16" oval and stop sleeves, plus 3/32" stainless steel oval sleeves.

P/N:**0-3/32SC** - swages 3/32" oval and 3/32", 1/8" stop sleeves, plus 1/8" stainless steel oval sleeves.

P/N:**0-1/8SC** - swages 1/8" oval and 5/32", 3/16", 7/32" stop sleeves plus 5/32 stainless steel sleeves.

P/N: **0-5/32SC** - swages 5/32" oval sleeves and 3/16 stainless steel.

P/N:**0-3/16SC** - swages 3/16" oval sleeves and 7/32 stainless steel

All No. 0-SC tools - 20" long, wt. 4.2 lbs.

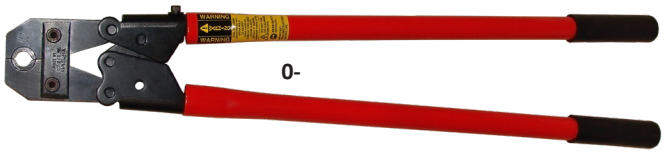

LOCOLOC® **0–** HAND SWAGERS

Single compression die for oval and stop sleeve swaging.

P/N: **0-7/32** - swages 7/32" oval sleeves and 1/4" stainless steel sleeves.

P/N: **0-1/4** - swages 1/4" oval and 1/4", 9/32", 5/16" stop sleeves & 3/8" stops.

P/N: **0-9/32** - swages 9/32" oval sleeves and 5/16" stainless steel sleeves.

P/N: **0-5/16** - swages 5/16" oval sleeves.

All No. 0 tools - 28" long, wt. 5 lbs.

LOCOLOC® **#1-SC** HAND SWAGER

Multi-compression hand swager with cable cutter. Swages 1/16", 3/32", 1/8", 5/32" and 3/16" oval and stop sleeves, plus 7/32" stop sleeves, total of 11 sizes plus the ability to cut up to 7/32" diameter aircraft quality steel cable. A tool with a dozen functions! 26" long, wt. 6.5 lbs.

For Stainless Steel sleeves use "0" tool.

LOCOLOC® **#1-BSC** BENCH SWAGER

For in-shop, one-location jobs. Multi-compression jaws swage 1/16", 3/32", 1/8", 5/32", and 3/16" oval and stop sleeves plus 7/32" stop sleeves. 22.5" long, 6.25" high (24" high with handle up), 6.6 lbs.

This tool is for Copper and Aluminum only.

© Loos & Co., Inc. - 2022
901 Industrial Blvd., Naples FL 34104

LOOS & CO. INC.
CABLEWARE® DIVISION
901 Industrial Blvd. Naples, FL 34104
(800) 321-LOOS (5667) | (239) 643-5667
Fax: (239) 643-4558 | sales@loosnaples.com
www.loosnaples.com

LOCOLOC® HANDSWAGERS

LOCOLOC® #1-P PNEUMATIC SWAGER

#1-P

The #1 Pneumatic Swager eliminates hand labor and automates swaging of Locoloc® oval and stop sleeves.
Utilizing the jaws of the #1-SC, the #1-Pneumatic Swager will swage all 1/16", 3/32", 1/8", 5/32", and 3/16" oval and stop sleeves plus 7/32" stop sleeves.
Foot switch operation allows free movement of hands and quick connect to your air supply. Operates on standard air supply (140 psi, minimum). 20" long, 11" high, 27.5 lbs.

This tool is for Copper and Aluminum only.

LOCOLOC® AZP KIT / CSS KIT / MSS KIT

Contains #1-SC hand swager, a C7 cable cutter, assortment of stop and oval sleeves, assortment of thimbles. Swages sizes from 1/16" to 3/16". Packaged in rugged steel tool box. Supplied with aluminum sleeves and zinc-plated steel thimbles or with copper sleeves and stainless steel thimbles.

Model No. Type
AZP Kit.....Aluminum & Zinc-Plated
CSS Kit.....Copper & Stainless Steel
MSS Kit.....Tin & Zinc-Plated

AZP KIT CONTAINS

1 - #1-SC Hand swager	1 - C7 Cable Cutter	100 - 1/16 Alum. Oval Slv.
100 - 3/32 Alum. Oval Slv.	50 - 1/8 Alum. Oval Slv.	40 - 5/32 Alum. Oval Slv.
20 - 3/16 Alum. Oval Slv.	100 - 1/16 Alum. Stop Slv.	50 - 1/8 Alum. Stop Slv.
20 - 3/16 Alum. Stop Slv.	100 - 3/32 Alum. Oval Slv.	40 - 5/32 Alum. Stop Slv.
20 - 3/16 Thimbles Zinc Pltd	100 - 1/16 Thimbles Zinc Pltd.	1 - Steel Tool Box
40 - 5/32 Thimbles Zinc Pltd.	50 - 3/32-1/8 Thimbles Zinc Pltd.	1 - Gauge GA-1P

Shipping weight (Entire Kit) : 20lbs.

CSS KIT CONTAINS

1 - #1-SC Hand swager	1 - C7 Cable Cutter	100 - 1/16 Copper Oval Slv.
100 - 3/32 Copper Oval Slv.	100 - 3/32 Copper Stop Slv.	40 - 5/32 Copper Oval Slv.
20 - 3/16 Copper Stop Slv.	100 - 1/16 Thimbles Stainless	20 - 3/16 Copper Oval Slv.
100 - 1/16 Copper Stop Slv.	20 - 3/16 Thimbles Stainless	50 - 1/8 Copper Stop Slv.
50 - 1/8 Copper Oval Slv.	50 - 3/32-1/8 Thimbles Stainless	1 - Steel Tool Box
40 - 5/32 Copper Stop Slv.	40 - 5/32 Thimbles Stainless	1 - Gauge GA-1P

Shipping weight (Entire Kit): 20lbs.

Replacement hardware for swaging kits may be priced from quantity price column for each type of hardware offered.

MSS KIT CONTAINS

1 - #1-SC Hand swager	1 - C7 Cable Cutter	200 - 1/16 Copper Oval Slv.
100 - 3/32 Copper Oval Slv.	100 - 3/32 Copper Stop Slv.	50 - 1/8 Copper Oval Slv.
200 1/16 Tin Pltd Copper Oval Slv.	100 - 3/32 Tin Pltd Copper Oval Slv.	100 - 3/32 Tin Pltd Copper Oval Slv.
50 - 1/8 Tin Pltd Copper Oval Slv.	200 - 1/16 Zinc Pltd Copper Oval Slv.	100 - 3/32 Zinc Pltd Copper Oval Slv.
100 - 3/32 Zinc Pltd Copper Oval Slv.	50 - 1/8 Zinc Pltd Copper Oval Slv.	50 3/64-3/32 Thimbles Stainless
50 - 3/32-1/8 Thimbles Stainless	1 - Steel Tool Box	1 - Gauge GA-1P

Shipping weight (Entire Kit): 20lbs.

LOCOLOC® SLEEVE GAUGES

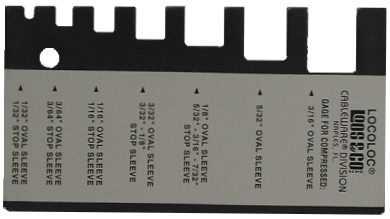

GA-1P

GA-2P

GA-1P: Gauges all swages performed by 000-WCI, 1-3SBHS 0-SC, and #1 tools (1/32", 3/64", 1/16", 3/32", 1/8", 5/32", and 3/16" oval and stop sleeves).

GA-2P: Gauges all swages performed by No. 0-SC tools (7/32", 1/4", 9/32", and 5/16").

Locoloc® sleeve gauges will assure proper swaging of Locoloc® aluminum, copper, and stainless steel sleeves with Locoloc® tools, these simple Go/No-Go gauges will determine if your tools are out of adjustment or alignment.
When the proper slot in the gauge slips over the compressed area of the sleeve after swaging, then your swage is satisfactory.
If the proper slot does not fit over the compressed area of the sleeve after swaging then your tool is out of adjustment and your cable assembly will not hold the rated breaking strength of the cable.
Stop sleeves must also be properly compressed and gauged to reach their rated loads which is 1/3 to 1/2 the breaking strength of the cable, depending on cable diameter.
The Locoloc® sleeve gauges will measure all oval or stop sleeves used on cable diameters 1/32" through 5/16".

LOOS & CO. INC.
CABLEWARE® DIVISION
901 Industrial Blvd. Naples, FL 34104
(800) 321-LOOS (5667) | (239) 643-5667
Fax: (239) 643-4558 | sales@loosnaples.com
www.loosnaples.com

© Loos & Co., Inc. - 2022
901 Industrial Blvd., Naples FL 34104

LOCOLOC® HANDSWAGERS

LOCOLOC® **#3-H** HYDRAULIC HAND SWAGER

LOCOLOC® #3-H

Exerts 12 tons of pressure. A few strokes of the handle brings the dies from wide open to contact with the fitting to be swaged. Then an internal valve automatically shifts from the low pressure pump stage to the high pressure compression stage. A relief valve prevents over-compression.

The advanced-retract control for the ram is located in the moveable handle. It is operated by twisting the handle less than a 1/4 turn.
Full visibility of the working area is afforded by the narrow, 180 degree swivel "C" head, making it easy to position the dies on the fitting.

Very rugged, yet portable, this hydraulic hand swaging press with interchangeable dies is for compressing aluminum or copper oval sleeves on 1/4", 9/32", 5/16", 3/8", 7/16", and 1/2" diameter cable and wire rope, plus aluminum or copper stop sleeves on 1/4", 9/32", 5/16", and 3/8" diameter cable and wire rope. Gauge supplied with each die.
#3 LOCOLOC® hand swager is 24" long, weighs 15 lbs. (Dies weigh 1 lb. each, and comes with carrying box.)

Available in complete kit, #3-K. (see below)

LOCOLOC® **#3-K** HYDRAULIC HAND SWAGER KIT

#3-H DIES

Die Part No.	To Swage
HD3-8	1/4 Copper or Aluminum Oval; 1/4, 9/32, 5/16, & 3/8 stop sleeves
HD3-10	5/16 Copper or Aluminum Oval Sleeve
HD3-12	3/8 Copper or Aluminum Oval Sleeve
HD3-14C	7/16 Copper Oval Sleeve
HD3-14A16C	7/16 Aluminum Oval and 1/2 Copper Oval Sleeves
HD3-16A	1/2 Aluminum Oval Sleeve

*HD3-6 and HD3-7 are available upon request
[1] Stainless Steel Dies are available upon request

© Loos & Co., Inc. - 2022
901 Industrial Blvd., Naples FL 34104

LOOS & CO. INC.
CABLEWARE® DIVISION
901 Industrial Blvd. Naples, FL 34104
(800) 321-LOOS (5667) | (239) 643-5667
Fax: (239) 643-4558 | sales@loosnaples.com
www.loosnaples.com

LOCOLOC® BATTERY SWAGING TOOLS

LOCOLOC® **SL-7NDK-R** BATTERY-POWERED HAND SWAGER

Single-cavity jaw, with interchangeable dies. Swages aluminum and copper oval sleeves for 1/16”, 3/32”, 1/8”, 5/32”, 3/16”, 7/32”, 1/4”, 9/32” and 5/16” size wire rope

- Operates in Confined Spaces
- 6 Ton Output
- Accepts “W” Type Dies
- One-Hand Operation
- Fully-Enclosed, Weather-Resistant Housing
- LED Work Lights
- 180° Rotational Head

SL-7NDK-R
Length: 15.8"
Weight: 5.9 lbs with battery
Output: 6 Ton

STANDARD ACCESSORIES INCLUDED:

1	Carrying Case
1	Battery Charger
2	BP-185 Lithium Ion Batteries
1	Carrying Strap

SL-7NDK-R Dies (sold separately)

Loos P/N	Description
DI2-2	Die for 1/16 copper & aluminum sleeves
DI2-3	Die for 3/32 copper & aluminum sleeves
DI2-4	Die for 1/8 copper & aluminum sleeves
DI2-5	Die for 5/32 copper & aluminum sleeves
DI2-6	Die for 3/16 copper & aluminum sleeves
DI2-7	Die for 7/32 copper & aluminum sleeves
DI2-8	Die for 1/4 copper & aluminum sleeves
DI2-9	Die for 9/32 copper & aluminum sleeves
DI2-10	Die for 5/16 copper & aluminum sleeves

* Special dies for Loos & Co. stainless steel sleeves only are available upon request.

LOCOLOC® **SL-C7510** BATTERY-POWERED HAND SWAGER

Single-cavity jaw, with interchangeable dies. Swages aluminum and copper oval sleeves for 1/4”, 5/16”, 3/8”, 7/16” and 1/2” size wire rope

- 12 Ton Output
- Accepts all 12-Ton “U” Type Dies
- One-Hand Operation
- Fully-Enclosed, Weather-Resistant Housing
- 180° Rotational Head
- LED Work Lights

STANDARD ACCESSORIES INCLUDED:

1	Carrying Case
1	Battery Charger
2	BP-185 Lithium Ion Batteries
1	Carrying Strap

SL-C7510
Length: 19.7"
Wide: 4.0"
Height: 6.4"
Weight: 15.2 lbs.

SL-C7510 Dies (sold separately)

Loos Part No	Description
HD3-8	1/4 copper or aluminum oval sleeves
HD3-10	5/16 copper or aluminum oval sleeves, or 3/8 SS sleeves
HD3-12	3/8 copper or aluminum oval sleeves
HD3-14C	7/16 copper oval sleeves
HD3-14A16C	7/16 aluminum oval and 1/2 copper oval sleeves
HD3-16A	1/2 aluminum oval sleeves
***HD3-6 is available upon request**	

** Special dies for Loos & Co. stainless steel sleeves only are available upon request.

LOOS & CO. INC.
CABLEWARE® DIVISION
901 Industrial Blvd. Naples, FL 34104
(800) 321-LOOS (5667) | (239) 643-5667
Fax: (239) 643-4558 | sales@loosnaples.com
www.loosnaples.com

© Loos & Co., Inc. - 2022
901 Industrial Blvd., Naples FL 34104

LOCOLOC® BATTERY CABLE CUTTERS

LOCOLOC® **HC-S724H** BATTERY-POWERED CABLE CUTTER

Cuts up to 7/8” wire rope.

- Rotational Head
- Works in Any Position
- 180° Rotational Head

Locoloc® HC-S724H
Weight: 11 lbs.
Output: 8 Ton
Jaw Opening: .95"
Size: 13.2" L x 14.7" H x 3.3"W

Note: Replacement Blade P/N: 24-08

LOCOLOC® **SL-S720** BATTERY-POWERED CABLE CUTTER

Cuts up to 5/8” wire rope.

- Flip-Top Latching Head
- Rapid Advance
- Tested UP to 75kV
- One Hand Operation
- 180° Rotational Head

Locoloc® SL-S720

Weight: 7.7 lbs
Size: 15.5"L x 4.8"H x 3.1"W
Jaw Opening: .75"
Output: 6 Ton

Note: Replacement Blade P/N: 20-07

All Standard **BATTERY-OPERATED TOOLS** Include:

CARRYING CASE

1	Carrying Case
1	Battery Charger
2	BP-185 Lithium Ion Batteries
1	Carrying Strap

BATTERY CARTRIDGE

BATTERY CHARGER

LOOS & CO. INC.
CABLEWARE® DIVISION
901 Industrial Blvd. Naples, FL 34104
(800) 321-LOOS (5667) | (239) 643-5667
Fax: (239) 643-4558 | sales@loosnaples.com
www.loosnaples.com

© Loos & Co., Inc. - 2022
901 Industrial Blvd., Naples FL 34104

PRECISION CABLE CUTTERS

Swiss-made FELCO® cutters are recognized around the world for their precision and cutting capabilities. Lightweight enough for overhead cutting yet strong enough for underwater work. Plastic-coated handles afford a firm, comfortable grip. Replacement parts are available from stock. All cutters tested before leaving the factory.

FELCO® C7 CABLE CUTTER

FELCO®
Capacity: 5/32" on stainless steel diameter and smaller.
Length: 7.5"
Weight: 9.5 oz.

High-strength Blades

Hardened and tempered for cutting the strongest of cables.

A cable when crushed or deformed in cutting is difficult to use with fittings. These cable cutters, with unique triangular jaws, never leave a frayed end.

FELCO® C3 CABLE CUTTER

FELCO® C3
Capacity: 3 mm for high-tensile strength wires and tire cords/cables.
Length: 7.5"
Weight: 9.05 oz.

High-strength Blades

Hardened and tempered for cutting the strongest of cables.

FELCO® C3 — Cutting surface of blades is more than 10% harder than the C7 FELCO® Cutter, giving longer service life in heavy use. Length of cutting blades is same as the C7, this will allow user to "capture" cable or wire in cutting motion. Handle opening is only 4.5 inches, giving a very comfortable fit for even the smallest of hands. Softer spring allows easy closure of the tool, vastly reducing repetitive motion stress.

FELCO® CP CUTTER

FELCO® CP
Length: 8"
Weight: 10 oz.

Type CP Cutters — F**or Steel Strapping and Banding**. CP cutters are indispensable for cutting steel strapping and banding. They are also especially good for cutting string, twine, rope, tin and many other materials with ease. The red plastic handle is fitted to the hand to make cutting comfortable. A thumb catch locks the cutter when not in use, designed for one-handed operation. Pressed steel handles with non-slip grips.

LOOS & CO. INC.
CABLEWARE® DIVISION
901 Industrial Blvd. Naples, FL 34104
(800) 321-LOOS (5667) | (239) 643-5667
Fax: (239) 643-4558 | sales@loosnaples.com
www.loosnaples.com

© Loos & Co., Inc. - 2022
901 Industrial Blvd., Naples FL 34104

PRECISION CABLE CUTTERS

A favorite accessory with spring clip to be attached to pocket or belt.
Fits C3, C7, CP, and CDO .

SHEATH-L

Leather sheath with belt loop and clip
Length: 9.3”
Weight: 3.9 oz.

FELCO® C9 CABLE CUTTER

FELCO®

Capacity: cuts 1/4” steel cable.
Length: 13”
Weight: 1.5 lbs.

High-strength Blades

Blades and fastenings in high-quality hardened steel

Fills the gap between C7 and C12 — Ideal for the tool kit. FELCO’s innovative triangular cut allows you to progressively cut cable wires and at the same time avoid squashing of strands. Thanks to this feature, it is generally not necessary to tie the cable before the cut. Forged Aluminum handles. Lightweight, strong and sturdy thanks to special aluminum alloys and advanced precision forging methods.

FELCO® C108 CABLE CUTTER

FELCO®
Weight: 4.5 lbs.
Length: 22”

Reliable: unbreakable hardened handles made of forged aluminum, blades and fastenings in high-quality hardened steel, phosphate-treated, corrosion-resistant.

Ergonomic: lightweight handles, helpful lever effect, comfortable plastic coating.

Simple construction, all parts protected against rust and salt water. Designed as an indispensable part of boat equipment. Especially suited for quick easy cutting of shrouds, stays, halyards, and other rigging of high-tensile wire rope or cable up to 5/16” diameter. Inexpensive insurance for that rare time when a mast breaks. The C108 will cut virtually any material including steel rods up to 5/16” diameter and tempered steel spring wires up to 1/4” diameter.

© Loos & Co., Inc. - 2022
901 Industrial Blvd., Naples FL 34104

LOOS & CO. INC.
CABLEWARE® DIVISION
901 Industrial Blvd. Naples, FL 34104
(800) 321-LOOS (5667) | (239) 643-5667
Fax: (239) 643-4558 | sales@loosnaples.com
www.loosnaples.com

PRECISION CABLE CUTTERS

FELCO® C112 CABLE CUTTER

Capacity of 1/2” hi-tensile strands.
Weight: 8.25 lbs.
Length: 29”

Reliable: unbreakable hardened handles made of forged aluminum, blades and fastenings in high-quality hardened steel, phosphate-treated, corrosion-resistant.

Ergonomic: lightweight handles, helpful lever effect, comfortable plastic coating.

Like the C108, this cutter also has maximum force transmission which applies the maximum leverage just at the right moment. This coupled with Swiss precision blades make the C112 and the C108 amazingly easy to use.

FELCO® C12 CABLE CUTTER

FELCO®
Capacity: 3/8” diameter
Length: 19” / 500mm
Weight: 3 lbs. / 1500g

Reliable: unbreakable hardened handles made of forged aluminum, blades and fastenings in high-quality hardened steel, phosphate-treated, corrosion-resistant.

Ergonomic: lightweight handles, helpful lever effect, comfortable plastic coating.

Efficient: clean, precise cut without crushing the cable thanks to the triangular cutting system. Easy and durable cutting adjustment.

FELCO® 16 CUTTER

FELCO®

Capacity: 5/8” diameter and smaller.
Length: 23”.
Weight: 5 lbs.

Reliable: unbreakable hardened handles made of forged aluminum, blades and fastenings in high-quality hardened steel, phosphate-treated, corrosion-resistant.

Ergonomic: lightweight handles, helpful lever effect, comfortable plastic coating.

Efficient: clean, precise cut without crushing the cable thanks to the triangular cutting system. Easy and durable cutting adjustment.

© Loos & Co., Inc. - 2022
901 Industrial Blvd., Naples FL 34104

PRECISION CABLE CUTTERS

FELCO® CB BASE - For Mounting C9, C12 and C16 CUTTERS

CB Base
Length: 13 inches / 325mm
Weight: 1.5 lbs. / 750g

Simply remove one handle from your C9, C12 or C16 Cutter, bolt on our base and your portable cutter has been converted to a stationary bench-mounted cutter.

IMPORTANT: It is possible to cut larger diameter than those mentioned above by separating the individual strands of the rope by using the triangular cutting action to nip these out. Types C108 and C112 are particularly recommended for this kind of work.

FELCO® CDO BARBED WIRE CUTTER

FELCO®
Length: 7 3/4" in. / 195mm
Weight. 9.9 oz. / 280g

Cutter especially designed for cutting barbed wire. Its cutting notch allows the wire to be caught by holding it at the bottom of the cutting profile. Small and efficient, it can easily be carried in a pocket.

The FELCO® cutter is the most efficient barbed wire cutter. Its small size and the thumb operated locking catch enable this handy cutter to fit in the pocket. Its triangular cutting action makes one-handed cutting easy. Hardened steel blades and center bolt, pressed steel handles with plastic coating.

SAFETY WIRE PLIER

Safety Twist Plier
Domestic No. IW393
Import No. WP-809

Length: 10 in.
Weight: .5lbs.

LOCOLOC® SAFETY TWIST PLIER - IW393

3 tools in one — cutter, wire twister, and a pair of pliers. You can grip, twist and snip safety wire faster and better than ever before. Designed for aircraft, industrial, and other "Vibrating" applications. The Safety Twist Plier is a versatile tool to help you do reliable safety-wiring (lock wiring) rapidly and consistently. Safety-wiring remains the most positive and assured method of securing critical fasteners that must not be allowed to back out: any tendency of the fastener to loosen is counteracted by tightening of the safety wire.

*** Available in Imported or Domestic**

© Loos & Co., Inc. - 2022
901 Industrial Blvd., Naples FL 34104

LOOS & CO. INC.
CABLEWARE® DIVISION
901 Industrial Blvd. Naples, FL 34104
(800) 321-LOOS (5667) | (239) 643-5667
Fax: (239) 643-4558 | sales@loosnaples.com
www.loosnaples.com

LOCOLOC® HYDRAULIC CABLE CUTTERS

LOCOLOC® **HC-16** HYDRAULIC CABLE CUTTER

Portable, lightweight, and made to last years under the toughest field conditions. This tool is made of high-grade steel and has rubber handle grips. It is black zinc oxide coated to help reduce corrosion.
A flip-top latch opens the tool jaw to easily accept cables and wires. The head can be rotated up to 180° to facilitate easy wire positioning and operator leverage.

- Lightweight and Portable
- Works in Any Position
- 180° Rotational Head

Cutting Capacity: 5/8”
Output: 4.4 Ton
Length: 15”
Weight: 6 lbs.
Jaw Opening: .6”

Note: Replacement Blade P/N: 20-07

LOCOLOC® **HC-16PL** HYDRAULIC CABLE CUTTER NICKEL-PLATED

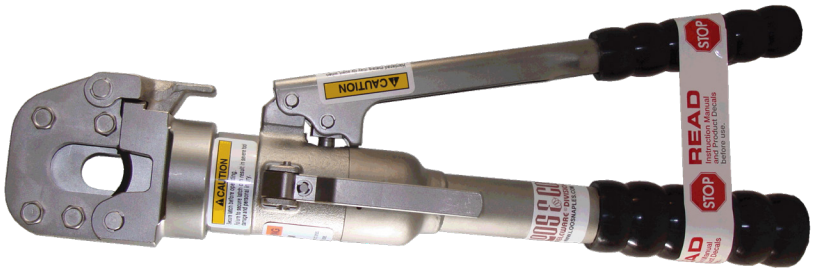

The HC-16PL is a saltwater-resistant, nickel-plated cutter for use in underwater environment. Its recommended uses include: marine nautical cutting, emergency cutting of stainless steel wire rope rigging and hardware, underwater rebar and cable cutting, and yacht mast rod cutting up to 1/2”.
Requires minimum pumping effort to produce specified output tonnage. Made to last years under the toughest field conditions.
A flip-top latch opens the tool jaw to easily accept cables and wires.

Cutting Capacity: 5/8”
Output: 4.4 Ton
Length: 15”
Weight: 6 lbs.
Jaw Opening: .60”
Plating: Nickel

- Lightweight and Portable
- Works in Any Position
- 180° Rotational Head
- HC-16PL is Nickel-Plated for Underwater Use

Note: Replacement Blade P/N: 20-07P

© Loos & Co., Inc. - 2022
901 Industrial Blvd., Naples FL 34104

LOCOLOC® HYDRAULIC CABLE CUTTERS

LOCOLOC® **HC-20** HYDRAULIC CABLE CUTTER

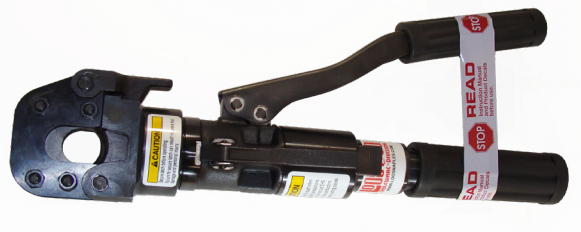

Portable, lightweight, and made to last years under the toughest field conditions. This tool is made of high-grade steel and has rubber handle grips. It is black zinc oxide coated to help reduce corrosion.
A flip-top latch opens the tool jaw to easily accept cables and wires.

Cutting Capacity: 3/4”
Output: 4.4 Ton
Weight: 6 Lbs.
Size: 14”L
Jaw Opening: .75”

- Lightweight and Portable
- Works in Any Position
- 180° Rotational Head

Note: Replacement Blade P/N: 20-07

LOCOLOC® **HC-24** HYDRAULIC CABLE CUTTER

Portable, lightweight, and made to last years under the toughest field conditions. This tool is made of high-grade steel and has rubber handle grips. It is black zinc oxide coated to help reduce corrosion.
A flip-top latch opens the tool jaw to easily accept cables and wires. The head can be rotated up to 180° to facilitate easy wire positioning and operator leverage. This tool can also be used to cut ACSR, up to 477 MCM, and EHS guy wire, up to 7/16”.

Cutting Capacity: 7/8”
Output: 7.8 Ton
Length: 17”
Weight: 9 lbs.
Jaw Opening: .9”

- Lightweight and Portable
- Works in Any Position
- 180° Rotational Head

Note: Replacement Blade P/N: 24-08

LOCOLOC® **REPLACEMENT BLADES**

20-07

24-08

20-07P

Loos Part No.	Description
20-07	Replacement Blade for HC-16, HC-20, & SL-S720
20-07P	Replacement Blade for HC-16PL
24-08	Replacement Blade for HC-24 & HC-S724H

© Loos & Co., Inc. - 2022
901 Industrial Blvd., Naples FL 34104

LOOS & CO. INC.
CABLEWARE® DIVISION
901 Industrial Blvd. Naples, FL 34104
(800) 321-LOOS (5667) | (239) 643-5667
Fax: (239) 643-4558 | sales@loosnaples.com
www.loosnaples.com

SIMPLEX® CABLE STRIPPERS

This fine tool has been produced since 1920 and has enjoyed a worldwide reputation for quality and service for over 60 years. Loos & Co., Inc. Cableware® Division manufactures this stripper in its Naples, Florida plant. Replacement parts and repair services are now available to the many thousands of customers who already own this tool. Sturdy, inexpensive, high production wire stripper. Quickly removes all types of insulation materials by simply inserting the wire or cable through the oscillating blades to the stop set for the desired length to be stripped. A quick withdrawal neatly removes the insulation.

SIMPLEX® CABLE STRIPPER **S-30C**

Extension handle for leverage. Capable of removing metallic sheathing, cambric, synthetic braided, plastics of all types including battery cables and multiple conductors.

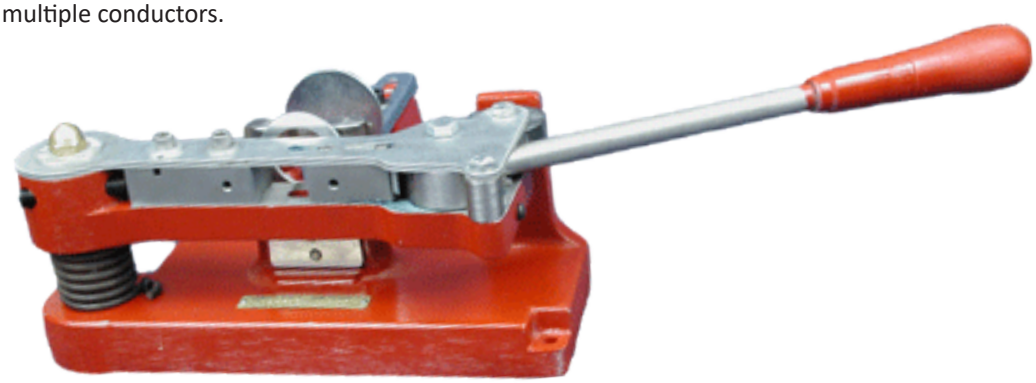

S-30C
Size: 9" x 10"x 5" High
Shipping weight: 20 lbs.
Maximum capacity : up to 3/4" diameter.

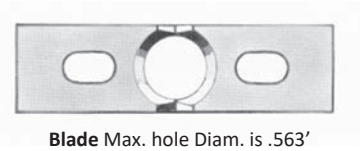

Blade Max. hole Diam. is .563'

Bushing Max. hole Diam. is .750'

Clamping Jaw

We recommend the use of Grooved Blades when removing outer jacketing and shielding and particularly on multi stranded wire where a clean stripped end is required.
We recommend using Blades, Bushing and Clamping Jaws with the S-30C.

BLADES are not furnished as standard equipment with the Model S-30C but MUST BE ORDERED SEPARATELY.
We recommend sending in a sample cable (1-2 ft) for the exact part numbers needed.

SIMPLEX® CABLE STRIPPER **S-15C**

BLADES AND GUIDES

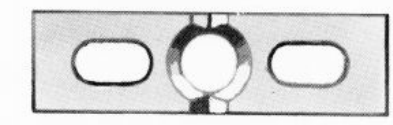

Blade max. hole dia. .375

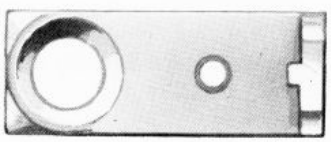

Wire guide max. hole dia. .375

LOOS & CO. INC.
CABLEWARE® DIVISION
901 Industrial Blvd. Naples, FL 34104
(800) 321-LOOS (5667) | (239) 643-5667
Fax: (239) 643-4558 | sales@loosnaples.com
www.loosnaples.com

© Loos & Co., Inc. - 2022
901 Industrial Blvd., Naples FL 34104

TENSION GAUGES

Loos Cableware® Division offers a series of gauges to measure the tension in cables and rods from 3/32 to 3/8 inch in diameter (2.5 mm to 10 mm). These gauges are designed for setting the proper tension in the standing rigging of sailboats and also for other applications such as supporting cables for radio towers, large tents, and other structures. The gauges are relatively inexpensive and are designed to be suitable for rugged marine service. The gauges measure tension over a range of approximately 5% to 25% of the breaking strength of the cable or rod and provide an accuracy of + or - 5%. The "Professional Models" (PT and RT series) provide an increasing durability, accuracy, and convenience of use when compared to our popular standard models. The gauge may be hooked on the wire and will remain in position while the tension is adjusted. Manufactured of rugged anodized aluminum, this gauge is corrosive resistant and will give years of service. Detailed operating instructions are included with each tension gauge.

STANDARD MODELS A & B

The Loos & Co. economy tension gauge takes the guesswork out of cable tension adjustment. It's especially designed for accurate, repeatable tuning of a sailboat's standing rigging. Manufactured of rugged anodized aluminum, the gauge is corrosion-resistant and will provide years of service.

Part No.	Description
91-Model A	Cable Sizes 3/32", 1/8", 5/32"
90-Model B	Cable Sizes 3/16", 7/32", 1/4", 9/32"
91-Metric	Cable Sizes 2.5mm, 3mm, 4mm
90-Metric	Cable Sizes 5mm, 6mm, 7mm

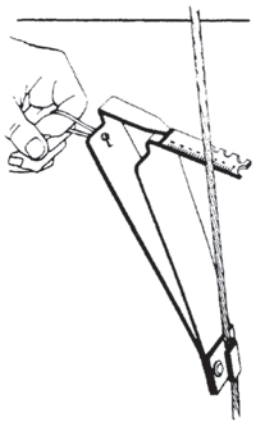

Note: The intended use of this gauge is to be used on 302/304 1x19 Stainless Steel cable in appropriate sizes. If used on other cable types, sizes, and constructions, your reading would be consistent (repeatable) but pound tension values would differ from those listed on the label.

PROFESSIONAL MODELS

Higher accuracy and easier to use than standard models. The cable can be adjusted while the gauge remains on the cable. "Just watch the pointer move."

Part No.	Description
PT-1	Cable Sizes 3/32", 1/8", 5/32"
PT-2	Cable Sizes 3/16", 7/32", 1/4"
PT-3	Cable Sizes 1/4", 9/32", 5/16", 3/8"
PT-1 Metric	Cable Sizes 2.5mm, 3mm, 4mm
PT-2 Metric	Cable Sizes 5mm, 6mm, 7mm
PT-3 Metric	Cable Sizes 7mm, 8mm, 9mm, 10mm

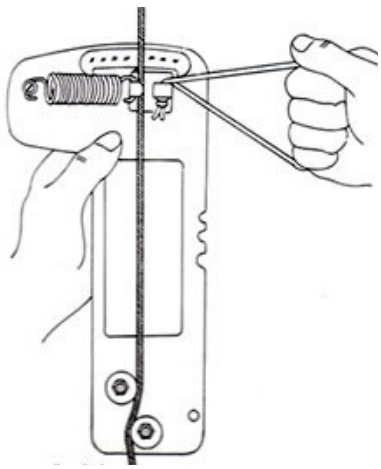

All readings are based on 302/304 1x19 SS breaking strengths.

© Loos & Co., Inc. - 2022
901 Industrial Blvd., Naples FL 34104

LOOS & CO. INC.
CABLEWARE® DIVISION
901 Industrial Blvd. Naples, FL 34104
(800) 321-LOOS (5667) | (239) 643-5667
Fax: (239) 643-4558 | sales@loosnaples.com
www.loosnaples.com

TENSION GAUGES

PT-CR

PROFESSIONAL MODEL **#PT-CR**

The Loos. & Co. Professional Model #PT-CR tension gauge is designed to provide an accurate measurement of the tension in architectural cable railing systems.

The Model #PT-CR is designed to measure cable tension in lbs. for 1/8", 3/16", and 1/4" 1x19 cables. Readings of between 200 and 400 lbs. are shown on the easy to read scale.

All readings are based on 302/304 1x19 SS breaking strengths.

ROD RIGGING GAUGE

RT

We offer a series of gauges to measure the tension in rods from .172 to .375 inch in diameter over a range of approximately 5% to 25% of the breaking strength of the rod and provide an accuracy of ± 5%. The "Professional Model" RT series provides an increasing durability, accuracy, and convenience of use. Manufactured of rugged anodized aluminum, this gauge is corrosive-resistant and will give years of service. Detailed operating instructions are included with each tension gauge. Operates in the same manner as the Professional Model Series.

Part No.	Description
RT-10	Rod Sizes .172, .198, .225, .250, .281
RT-11	Rod Sizes .281, .330, .375
RT-10M	Rod Sizes 4.4, 5, 5.7, 6.3, and 7.1
RT-11M	Rod Sizes 7.1, 8.4, and 9.5

LOOS & CO. INC.
CABLEWARE® DIVISION
901 Industrial Blvd. Naples, FL 34104
(800) 321-LOOS (5667) | (239) 643-5667
Fax: (239) 643-4558 | sales@loosnaples.com
www.loosnaples.com

© Loos & Co., Inc. - 2022
901 Industrial Blvd., Naples FL 34104

#5-H LOCOLOC® HYDRAULIC SWAGER

Strong and Powerful - The #5-H Locoloc® combines 25 tons of strength with an independent hydraulic power supply.
Compact - It's lighter and more compact than normal-, low-, or medium-pressure hydraulic units.
Consistent - This swager assures dependable pressure for strong, dependable cable assemblies.

The #5-H Locoloc® Hydraulic Swager has a reputation for reliable production.
Its quality components include:

- A 1 HP, 115 volt powered 2 stage hydraulic pump and 4-way valve assembly with integral 2 gallon reservoir.
- A 3" bore hydraulic cylinder rated for 10,000 PSI.
- A control system providing a method of changing pressure and actuating the hydraulic swaging unit.
- A convenient work stand on which the swaging package is mounted.
- A wide selection of swaging dies developed and proven by Loos Naples.

Greater Production - This 10,000 PSI system swages 3/64" to 1/2" Locoloc® aluminum and copper oval and stop sleeves with ease. The #5 Locoloc® Hydraulic Swager, swages from 500 PSI every 1 second (approx.) to 8,000 PSI every 6 seconds (approx.).

If you suspect slow swaging production may be stealing some of your profits, find out more about the #5-H Locoloc® Hydraulic Swager. Alias: The Production Pusher.

Ask us about the many types of hardware and cable we offer to solve your production needs, including Locoloc® aluminum oval & stop sleeves, copper oval & stop sleeves, and stainless steel oval sleeves.

For dependable swaging, use only Locoloc® Aluminum Oval & Stop Sleeves, Copper Oval & Stop Sleeves, and Stainless Steel Oval Sleeve.

Dies Sold Separately

Dies for the #5-H	
Part Number	**Description**
DI4-1.5	3/64 Copper or Aluminum, Oval or Stop Sleeve 3/64 or 1/16 Stainless Steel Oval Sleeve
DI4-2	1/16 Copper or Aluminum, Oval or Stop Sleeves 3/32 Stainless Steel Oval Sleeve
DI4-3	3/32 Copper or Aluminum Oval or Stop Sleeves 1/8 Copper or Aluminum Stop Sleeves 1/8 Stainless Steel Oval Sleeve
DI4-4	1/8 Copper or Aluminum Oval Sleeves 5/32, 3/1,6 & 7/32 Copper or Aluminum Stop Sleeves 5/32 Stainless Steel Oval Sleeve
DI4-5	5/32 Copper or Aluminum Oval Sleeves 3/16 Stainless Steel Oval Sleeve
DI4-6	3/16 Copper or Aluminum Oval Sleeves 7/32 Stainless Steel Oval Sleeve
DI4-7	7/32 Copper or Aluminum Oval Sleeves 1/4 Stainless Steel Oval Sleeve
DI4-8	1/4 Copper or Aluminum Oval Sleeves 1/4, 9/32, & 5/16 Copper or Aluminum Stop Sleeves
DI4-9	9/32 Copper or Aluminum Oval Sleeves 5/16 Stainless Steel Oval Sleeve
DI4-10	5/16 Copper or Aluminum Oval Sleeves 3/8 Stainless Steel Oval Sleeve
DI4-12	3/8 Copper or Aluminum Oval Sleeves
DI4-14	7/16 Copper or Aluminum Oval Sleeves
DI4-16	1/2 Copper or Aluminum Oval Sleeves

© Loos & Co., Inc. - 2022
901 Industrial Blvd., Naples FL 34104

LOOS & CO. INC.
CABLEWARE® DIVISION
901 Industrial Blvd. Naples, FL 34104
(800) 321-LOOS (5667) | (239) 643-5667
Fax: (239) 643-4558 | sales@loosnaples.com
www.loosnaples.com

LOCOLOC® HAND SWAGER - TYPE I

LOCOLOC® PORTABLE MANUAL SWAGING MACHINE - **M1**

This portable, hand-operated roll type swaging machine, will swage MS type terminals onto galvanized and stainless steel cables from 1/16" diameter up to and including 3/16" diameter. Marine-industrial terminals can also be assembled if the terminals have the same outside diameter and bore diameters as standard MS terminals before swaging.

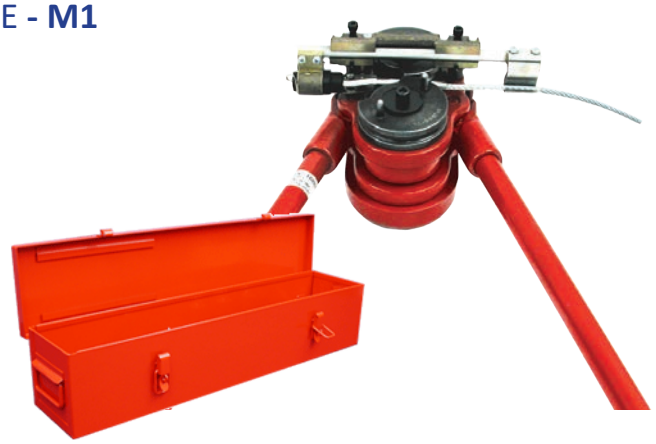

Shipping Weight: 54 Lbs.
Conforms to **MIL Spec MIL-S-6180**

LOCOLOC® PORTABLE MANUAL SWAGING MACHINE KIT - **M1-K**

The LOCOLOC®-Kearney Type I Roll Swaging Kit, includes the machine (M1), a full set of roll dies (5 Shank Terminal Roll Dies, 3 sets Ball Terminal Dies), terminal gauges, and feed guide adapters in a steel carrying and storage case.

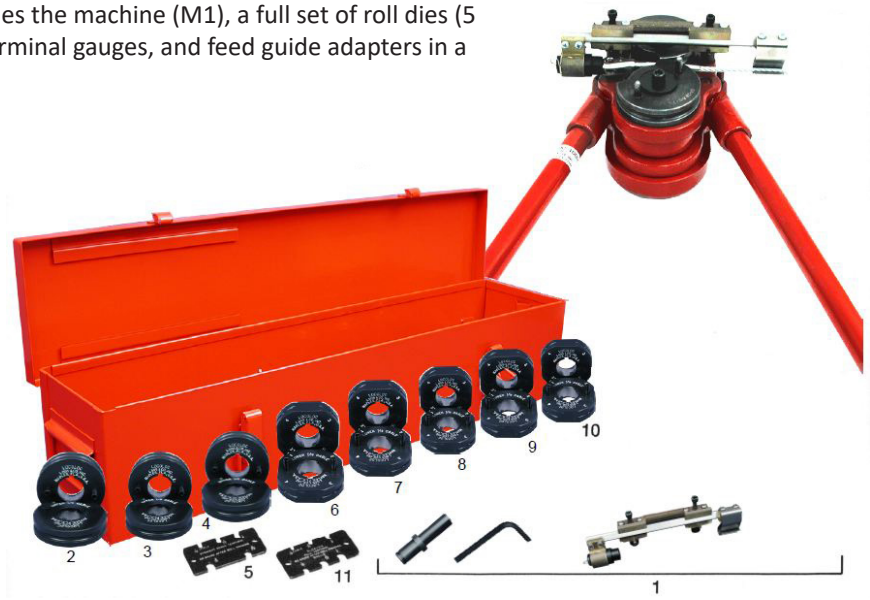

Shipping Weight: 64 Lbs.
Conforms to **MIL Spec MIL-S-6180**

Straight Shank Terminal Dies Weight: 4 Lbs. Ea. Set
Ball Terminal Dies Weight: 4 Lbs. Ea Set.
Gauges Weight: 1 Lb. Ea.

Index No.	Loos Part No.	Old Part No.	Part Name	Qty.
1	**M1 (74)**	7-4	Swaging Machines with Case, Allen Wrench, Feed Guide Assembly, and Feed Guide Adapters	1
2	**M1-B2**	12748-10	Ball-Shank Terminal Roll Assy. (for 1/16 inch cable)	1
3	**M1-B3**	12748-11	Ball-Shank Terminal Roll Assy. (for 3/32 inch cable)	1
4	**M1-B4**	12748-12	Ball-Shank Terminal Roll Assy. (for 1/8 inch cable)	1
5	**GA-B24**	12971-1	Ball-Type Terminal Gauge (1/16 - 1/8 inch cable)	1
6	**M1-S2**	13655-7	Straight-Shank Terminal Roll Assy. (for 1/16 inch cable)	1
7	**M1-S3**	13655-17	Straight-Shank Terminal Roll Assy. (for 3/32 inch cable)	1
8	**M1-S4**	13655-27	Straight-Shank Terminal Roll Assy. (for 1/8 inch cable)	1
9	**M1-S5**	13655-37	Straight-Shank Terminal Roll Assy. (for 5/32 inch cable)	1
10	**M2-S6**	13655-47	Straight-Shank Terminal Roll Assy. (for 3/16 inch cable)	1
11	**GA-S26**	12971-2	Straight-Shank Terminal Gauge (1/16 - 3/16 inch cable)	1

LOOS & CO. INC.
CABLEWARE® DIVISION
901 Industrial Blvd. Naples, FL 34104
(800) 321-LOOS (5667) | (239) 643-5667
Fax: (239) 643-4558 | sales@loosnaples.com
www.loosnaples.com

© Loos & Co., Inc. - 2022
901 Industrial Blvd., Naples FL 34104

LOCOLOC® MANUAL BENCH SWAGING MACHINE KIT - **M2-K**

Type II Bench-Mounted Swaging Machine Kit contains the following (as illustrated):

1 M2 Bench-Mounted Swaging Machine
10 Sets, Straight Shank Rolls (Dies)
7 Sets, Ball Terminal Rolls (Dies)
4 Gauges, for all Ball and Shank Terminals
1 Auxiliary Adapter, with bolt (P/N: M2-AA26)
1 Spring Clip Assembly (P/N: M2-SCA)
1 Guide Assembly Adjustable Stop (P/N: GAAS)
1 Bench for mounting M2 Swaging Machine

Shipping Weight: 425 Lbs.
Conforms to **MIL Spec MIL-S-6180**

Straight Shank Dies Weight: 8.5 Lbs. Ea. Set
Ball Terminal Dies Weight: 10 Lbs. Ea Set.
Gauges Weight: 1 Lb. Ea

Index No.	Loos Part No.	Old Part No.	Part Name	Qty.
1	**M2 (84)**	8-4	Roll Swaging Machine with Shipping Case/Bench, Wrench, and Handle Extension	1
2	**M2-B2**	12548	Ball-Shank Terminal Roll Assembly (for 1/16 inch cable)	1
3	**M2-B3**	12548-1	Ball-Shank Terminal Roll Assembly (for 3/32 inch cable)	1
4	**M2-B4**	12548-2	Ball-Shank Terminal Roll Assembly (for 1/8 inch cable)	1
5	**M2-B5**	12548-3	Ball-Shank Terminal Roll Assembly (for 5/32 inch cable)	1
6	**M2-B6**	12548-4	Ball-Shank Terminal Roll Assembly (for 3/16 inch cable)	1
7	**M2-B7**	12548-5	Ball-Shank Terminal Roll Assembly (for 7/32 inch cable)	1
8	**M2-B8**	12548-6	Ball-Shank Terminal Roll Assembly (for 1/4 inch cable)	1
9	**M2-S2**	20438-2	Straight-Shank Terminal Roll Assembly (for 3/16 inch cable)	1
10	**M2-S3**	20438-3	Straight-Shank Terminal Roll Assembly (for 3/32 inch cable)	1
11	**M2-S4**	20438-4	Straight-Shank Terminal Roll Assembly (for 1/8 inch cable)	1
12	**M2-S5**	20438-5	Straight-Shank Terminal Roll Assembly (for 5/32 inch cable)	1
13	**M2-S6**	20438-6	Straight-Shank Terminal Roll Assembly (for 3/16 inch cable)	1
14	**M2-S7**	20438-7	Straight-Shank Terminal Roll Assembly (for 7/32 inch cable)	1
15	**M2-S8**	20438-8	Straight-Shank Terminal Roll Assembly (for 1/4 inch cable)	1
16	**M2-S9**	20438-9	Straight-Shank Terminal Roll Assembly (for 3/32 inch cable)	1
17	**M2-S10**	20438-10	Straight-Shank Terminal Roll Assembly (for 5/16 inch cable)	1
18	**M2-S12**	20438-12	Straight-Shank Terminal Roll Assembly (for 7/32 - 3/8 inch cable)	1
19	**GA-S712**	13329	Straight-Shank Terminal Gauge (for 1/16inch thru 3/16 inch cable)	1
20	**GA-S26**	12971-2	Straight-Shank Terminal Gauge (for 3/16 inch cable)	1
21	**GA-B24**	12971-1	Ball Type Terminal Gauge (for 1/16 inch thru 1/8 inch cable)	1
22	**GA-B58**	17692	Ball Type Terminal Gauge (5/32 - 1/4 inch cable)	1
23	**M2-SCA**	17918	Spring Clip Assembly	1
24	**M2-AA26**	19837	Auxillary Adapter w/ bolt (for use with straight-shank terminal rolls 1/16 - 3/16 inch)	1

© Loos & Co., Inc. - 2022
901 Industrial Blvd., Naples FL 34104

LOOS & CO. INC.
CABLEWARE® DIVISION
901 Industrial Blvd. Naples, FL 34104
(800) 321-LOOS (5667) | (239) 643-5667
Fax: (239) 643-4558 | sales@loosnaples.com
www.loosnaples.com

LOCOLOC® MANUAL BENCH SWAGER - TYPE II

LOCOLOC® MANUAL BENCH SWAGER - **M2**

A more sophisticated swaging machine which is bench-mounted, hand-powered with crank geared down for easy operation. This swaging machine will accomplish the swaging of AN or MS type fittings on all galvanized and stainless steel cable, up to and including 3/8" diameter. Available in kit complete with swaging machine and dies or machine and dies can be purchased separately .

Shipping Weight: 225 Lbs.
Conforms to **MIL Spec MIL-S-6180**

LOCOLOC® MULTI-PURPOSE SHIPPING CONTAINER - **M2**

84-81

We have also designed for the new Type II Swaging Machine, a new multi-purpose shipping container shown made of welded steel plate, with the object of assuring safe delivery of the machine to the customer and at the same time providing him with a sturdy bench on which to mount his swaging machine and a convenient storage cabinet for the dies and accessories.

Upon receipt of the shipping container/ bench, the customer simply unbolts the machine, transfers it to the top, and, using the same bolts and the same holes, secures it in the operating position, as shown. Provision is made for the attachment of heavy-duty lockable industrial casters at the corners of the lower frame to facilitate moving the machine around the shop.

M2

© Loos & Co., Inc. - 2022
901 Industrial Blvd., Naples FL 34104

ACCESSORIES FOR M2

GA-B24

GA-B58

GA-S26

GA-S712

M2-SCA

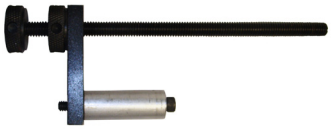
M2-GAAS

M2-PEK

M2-AA26

Loos P/N	Old Kearney P/N	Description
84-81		Steel bench for mounting M2 Kearney Machine (Shipping Container)
M2-AA26	19837	Auxiliary Adapter (with bolt) for use with Straight Dies (1/16 through 3/16)
GA-B24	12971-1	Gauge for Ball Terminals 1/16, 3/32, & 1/8
GA-B58	17692	Gauge for Ball Terminals 5/32 through 1/4
GA-S26	12971-2	Gauge for Straight Shank Terminals 1/16 through 3/16
GA-S712	13329	Gauge for Straight Shank Terminals 7/32 through 3/8
M2-SCA	17918	Spring Clip Assembly
GAAS		Guide Assembly Adjustable Stop
84-60		Guide Assembly
M2-PEK		Kit Electrical M2 (Replaces old style foot assembly)

© Loos & Co., Inc. - 2022
901 Industrial Blvd., Naples FL 34104

LOOS & CO. INC.
CABLEWARE® DIVISION
901 Industrial Blvd. Naples, FL 34104
(800) 321-LOOS (5667) | (239) 643-5667
Fax: (239) 643-4558 | sales@loosnaples.com
www.loosnaples.com

LOCOLOC® BENCH-MOUNTED POWERED SWAGING MACHINES

LOCOLOC® POWERED SWAGER, TYPE II SWAGER - **M2-P**

We also offer a power drive for optional application to the Type II Swaging Machine. This specially designed power drive consists of:

- M2 Locoloc® Type II Swager
- 1.5 Horsepower, Single Phase, 115 Volt Motor, Type TEFC
- Right Angle Gear Reducer
- Foot Switch with 7.5 feet of cord connected to motor and 9 feet of cord for connection to power supply.
- 2 Chain Sprockets, Roller Chain, and Adjustable Base to tighten chain.
- Chain Guard
- Steel base plate to which both the reduction gear housing and the swaging machine can be secured in their proper relative locations by cap screws.

Unless otherwise specified in the customer's purchase order, power drive units will be shipped from the factory wired for 115 volts power supply and the 9 ft. 3-wire power supply cable will have a standard 3-prong plug (2 line and 1 ground) assembled to its free end.

Conforms to **Mil Spec MIL-S-6180**
Shipping Weight: 200 Lbs.

Part No. M2-P POWERED SWAGING MACHINE only, without Dies or Accessories.

Shipping container/bench with power driven machine inside ready for shipping.

FACTORY INSTALLATION

If so ordered, the Power Drive will be shipped from the factory assembled to the Type II Swaging Machine, as shown at left.

In this case, the assembly of the Type II Swaging Machine and the Power Drive is attached to and enclosed in the lower half of the shipping container/bench and the dies and accessories are secured in the upper half. Here again, upon receipt at the customer's plant, the assembly of the Type II Swaging Machine and Power Drive is detached from the shipping container/bench, transferred to the bench surface, and secured there by inserting the shipping bolts into pre-drilled holes in the bench.

LOOS & CO. INC.
CABLEWARE® DIVISION
901 Industrial Blvd. Naples, FL 34104
(800) 321-LOOS (5667) | (239) 643-5667
Fax: (239) 643-4558 | sales@loosnaples.com
www.loosnaples.com

© Loos & Co., Inc. - 2022
901 Industrial Blvd., Naples FL 34104

LOCOLOC® BENCH-MOUNTED POWERED SWAGING MACHINES

LOCOLOC® POWERED DRIVE KIT for TYPE II SWAGER - **M2-PDK**

CUSTOMER INSTALLATION

If the customer wishes to convert a Type II manually operated Swaging Machine to power drive, he can obtain a Power Drive Kit and assemble it to the machine in his own shop. Detailed instructions for making this conversion are supplied with each kit.

Power Drive Kit laid out
Shipping Weight 140 lbs.

M2-PDK LOCOLOC® POWERED Drive Kit for Type II Machines to CONVERT Manual Machines to ELECTRIC POWER Kit Contains:

- 12 x 19 Mounting Plate.
- Adjustable Base to Tighten Chain.
- Right Angle Gear Reducer including 1.5” HP Single-Phase, 115 volt motor.
- Foot Switch with 5 feet of cord connected to motor and 10 feet of cord for connection to power supply.
- Two Chain Sprockets and Roller Chain.
- Necessary cap screws to mount gear box, swager, and guard.
- Chain Guard.

LOCOLOC® BENCH-MOUNTED POWERED SWAGING MACHINE KIT - **M2-PK**

Locoloc® - Bench-Mounting POWERED SWAGING MACHINE KIT, contains the following:

M2-P Locoloc® - Bench-Mounted Powered Swaging Machine
10 Sets, Straight Shank Roll Dies to fit 1/16” through 3/8” Cable
7 Sets, Ball Terminal Roll Dies to fit 1/16” through 1/4” Cable
4 Gauges, for all Ball and Shank Terminals
1 Auxiliary Adapter, with bolt (M2-AA26)
1 Spring Clip Assembly (M2-SCA)
1 Guide Assembly Adjustable Stop (GAAS)
1 Bench for Mounting Type II POWERED

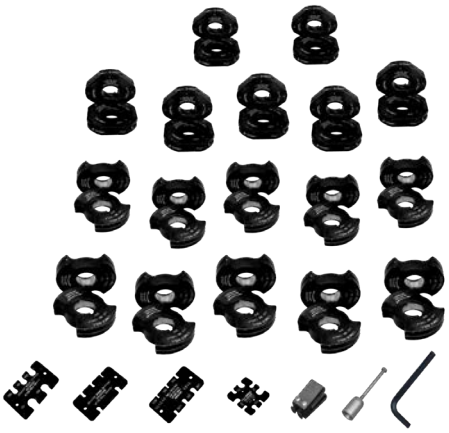

Conforms to **Mil Spec MIL-S-6180**
Shipping Weight: 550 Lbs.

M2P-K POWERED SWAGING MACHINE KIT,
with Dies and Accessories.
(Shipping Weight 550 lbs.)

© Loos & Co., Inc. - 2022
901 Industrial Blvd., Naples FL 34104

LOOS & CO. INC.
CABLEWARE® DIVISION
901 Industrial Blvd. Naples, FL 34104
(800) 321-LOOS (5667) | (239) 643-5667
Fax: (239) 643-4558 | sales@loosnaples.com
www.loosnaples.com

QUALITY CONTROL

Loos & Co., Inc. operates a fully-staffed Quality Control Department conforming to the requirements of ISO9001 and AS9100. Statistical Process Control procedures are employed as well as dimensional and nondestructive testing. Measuring instruments and gauge controls are in accordance with NIST and/or ISO 17025. Our personnel and procedures have undergone quality assurance inspections by most aerospace firms, as well as government agencies. These evaluations have always resulted in Loos & Co. receiving top ratings.

ATTENTION DISTRIBUTORS

Reproducible art work, flyers, and brochures are available on all products listed in this catalog for your advertising use or for insertion in your catalogs. Advise us of products or pages of specific interest. Request for permissions must be provided prior to reproducing any parts of this catalog per Loos & Co. copyrights.

ATTENTION: LOCOLOC® -KEARNEY Machine Owners
SUBJECT: WARRANTY RESTRICTION INFORMATION

Loos & Co. restricts the warranty on all Locoloc® - Kearney machines to the use of only Locoloc® fittings to fully guarantee the performance of our machines. We cannot be responsible for machine damage caused by another manufacturer's fittings that exceed Rockwell hardness of 62, A scale or RB100.

Obviously, there are certain fittings that will be swaged by Locoloc®-Kearney machines that we do not or cannot supply. When this occurs we request that you check the hardness of the fittings to determine that the maximum Rockwell hardness is 62, A scale. We cannot be responsible for machine damage caused by another manufacturer's fittings that exceed Rockwell hardness of 62, A scale or RB100.

CAUTION: WHEN SWAGING FITTINGS ONTO 1 x 19 CABLE

When swaging fittings on to 1 x 19 construction wire rope, remember that there is little or no compression remaining in this construction. The wire rope itself is very solid with little or no "give."

A combination of a 1 x 19 construction wire rope manufactured on the "high side" of its tolerance and a fitting with a hole running on the "low side" of its tolerance (see dimensions to fittings under specifications) will exaggerate this problem. Remember a swaging machine must have room to "flow" or "move" the steel in the fitting to form around the wire rope. There must be space to accomplish this.

In addition, many manufacturers do not drill the hole in their fittings deep enough. This leaves a space at the base of the fitting of solid steel. This distance can vary from 1/4" up to over 1". The Locoloc®-Kearney machine simply cannot perform the impossible and swage solid metal, again there must be room for the steel to "flow" or "move."

When any of the situations above occur, the result can be broken dies, sprung machines, ruined fittings, and perhaps loss of expensive wire rope. The majority of cases could easily be avoided by checking the following before attempting to swage:

1. Diameter of wire rope - is it on high side of tolerance?
2. Inside diameter of fitting - will the wire rope fit with ease?
3. Depth of hole in fitting - do not attempt to swage over solid steel, begin swage at the bottom of the hole.
4. Hardness of steel - check Rockwell Hardness. See above.
5. Do not add leverage to your swaging machine by extending the handle beyond the length of the handle extension we supply. The handle is designed to accomplish the maximum compression for which the machine is designed. Adding to the handle length will result in broken dies, broken gears, and/or sprung frames and large repair costs.

© Loos & Co., Inc. - 2022
901 Industrial Blvd., Naples FL 34104

TABLE OF CONTENTS

Description	Page
Aluminum Oval Sleeves	12
Aluminum Oval Thin Wall Sleeves	13
Aluminum Stop Sleeves	12
AN100 Thimbles, Cold-Rolled Steel	8
AN100 Thimbles, Stainless Steel	8
AN111 Cable Bushings	7
Ball Fitting	1
Ball, Double Shank MS20663	1
Ball, Single Shank MS	1
Bench-Mounted Cutters	23
Bench Swagers	31-37
Boeing Button	2
Clamps, Wire Rope, Galvanized	11
Clamps, Wire Rope, Stainless Steel	11
Clip Locking Turnbuckle	6
Clips, Net	9
Clips, Wire Rope	11
Copper Oval Sleeves	12
Copper, Zinc-Plated Oval Sleeves	12
Cutters, Bench-Mounted	23
Cutters, Cable	20-27
Cylindrical Terminals	2
Dies, Swaging	31-37
Double Shank Ball, MS20663	1
Eye End, MS20668	3
Eye End, Strap, NAS 1435-E	2
Eye End Terminations	2-4,7
Eye, Marine	4
Fittings, Oval & Stop Sleeves	12
Fork End, MS20667	3
Fork End, Strap NAS 1435-K	2
Fork End Terminals	2,3
Galvanized Wire Rope Clamps	11
Galvanized Wire Rope Clips	11
Galvanized Wire Rope Thimbles	8-9
Gauge, Cable Diameter	13
Gauge, Tension	29-30

© Loos & Co., Inc. - 2022
901 Industrial Blvd., Naples FL 34104

LOOS & CO. INC.
CABLEWARE® DIVISION
901 Industrial Blvd. Naples, FL 34104
(800) 321-LOOS (5667) | (239) 643-5667
Fax: (239) 643-4558 | sales@loosnaples.com
www.loosnaples.com

TABLE OF CONTENTS

Description	Page
Hand swagers	14-19
Handswaging Kits	16, 17, 32
Handheld Wire Strippers and Cutters	28
Hydraulic Swagers	17, 31
Kits, Handswaging	16, 17, 32
Locking-Clip, Turnbuckle, MS21256	6
Locking Wire, Safety	10
MS20663, Double Shank Ball	1
MS20664, Single Shank Ball	1
MS20667, Fork End	3
MS20668, Eye End	3
MS21259, Stud	4
MS21260, Stud	5
MS Fittings	1-7
MS Fittings, Clevis Pins	3
Machine, Swaging	31-37
Marine Eye	4
NAS1435-E, Strap Eye	2
NAS1435-K, Strap Fork	2
Net Clip Tool	10
Net Clips	9
Oval Sleeves, Aluminum	12
Oval Sleeves, Copper	12
Oval Sleeves, Copper Zinc-Plated	12
Oval Sleeves, Stainless Steel	13
Pins, Clevis for MS Fittings	3
Pins, Cotter	2
Pneumatic Swagers	16
Powered Swaging Machines	18-20, 31, 36-37
Quality Assurance	38
Quality Policy	38
Safety Wire Pliers	23
Simplex® Wire/Cable Strippers	28
Single Shank Ball, MS20664	1
Sleeves, Oval Aluminum	12

© Loos & Co., Inc. - 2022
901 Industrial Blvd., Naples FL 34104

TABLE OF CONTENTS

Description	Page
Sleeves, Oval Copper	12
Sleeves, Oval, Copper, Zinc-Plated	12
Sleeves, Stop Aluminum	12
Sleeves, Stop Copper	12
Sleeves, Stainless Steel	13
Sleeves, Thin Wall Aluminum Oval	13
Stainless Steel, AN100 Thimbles	8
Stainless Steel, Locking Wire	10
Stainless Steel, Oval Sleeves	13
Stainless Steel, Safety Wire	10
Stainless Steel, Thimbles AN100	8
Stainless Steel, Thimbles Type 302/304	8
Stainless Steel, Wire Rope Clips	11
Stop Sleeves	12
Strap, Eye NAS1435-E	2
Strap, Fork End NAS1435-K	2
Strippers, Wire/Cable	28
Stud, AN 669	5
Stud, MS21259	4
Stud, MS21260	5
Swagers, Bench	15-16, 31-36
Swagers, Hand	14-19
Swagers, Hydraulic	31, 17
Swagers, Pneumatic	16
Swaging Dies	17-19, 31-37
Swaging, Electric-Powered	31, 36-37
Swaging, Machines	31-37
Swaging Kits, Hand	16-17, 32
Tension Gauge	29-30
Terminals, Cylindrical	2
Terminals, Wire Rope	1-13
Terminations, Oval and Stop Sleeves	12-13
Thimbles, AN100 Cold-Rolled Steel	8
Thimbles, AN100 Stainless Steel	8

© Loos & Co., Inc. - 2022
901 Industrial Blvd., Naples FL 34104

LOOS & CO. INC.
CABLEWARE® DIVISION
901 Industrial Blvd. Naples, FL 34104
(800) 321-LOOS (5667) | (239) 643-5667
Fax: (239) 643-4558 | sales@loosnaples.com
www.loosnaples.com

Our Quality Policy

The dedicated associates at Loos & Co., Inc. Cableware® Division are committed to providing customer satisfaction at every level. We achieve this through a certified quality management system, by cultivating strategic supplier partnerships, and a mind-set of continuous improvement.

LOOS & CO. INC.

CABLEWARE® DIVISION

ESTABLISHED 1958

LOOS & CO. INC.

CABLEWARE® DIVISION

901 Industrial Boulevard | Naples, Florida 34104 | USA
Phone: (800) 321-LOOS (5667) | (239) 643-5667 | Fax: (239) 643-4558
Email: sales@loosnaples.com | Web: www.loosnaples.com

60 Years of Progress

MKT-CW-NPL
1.31.22